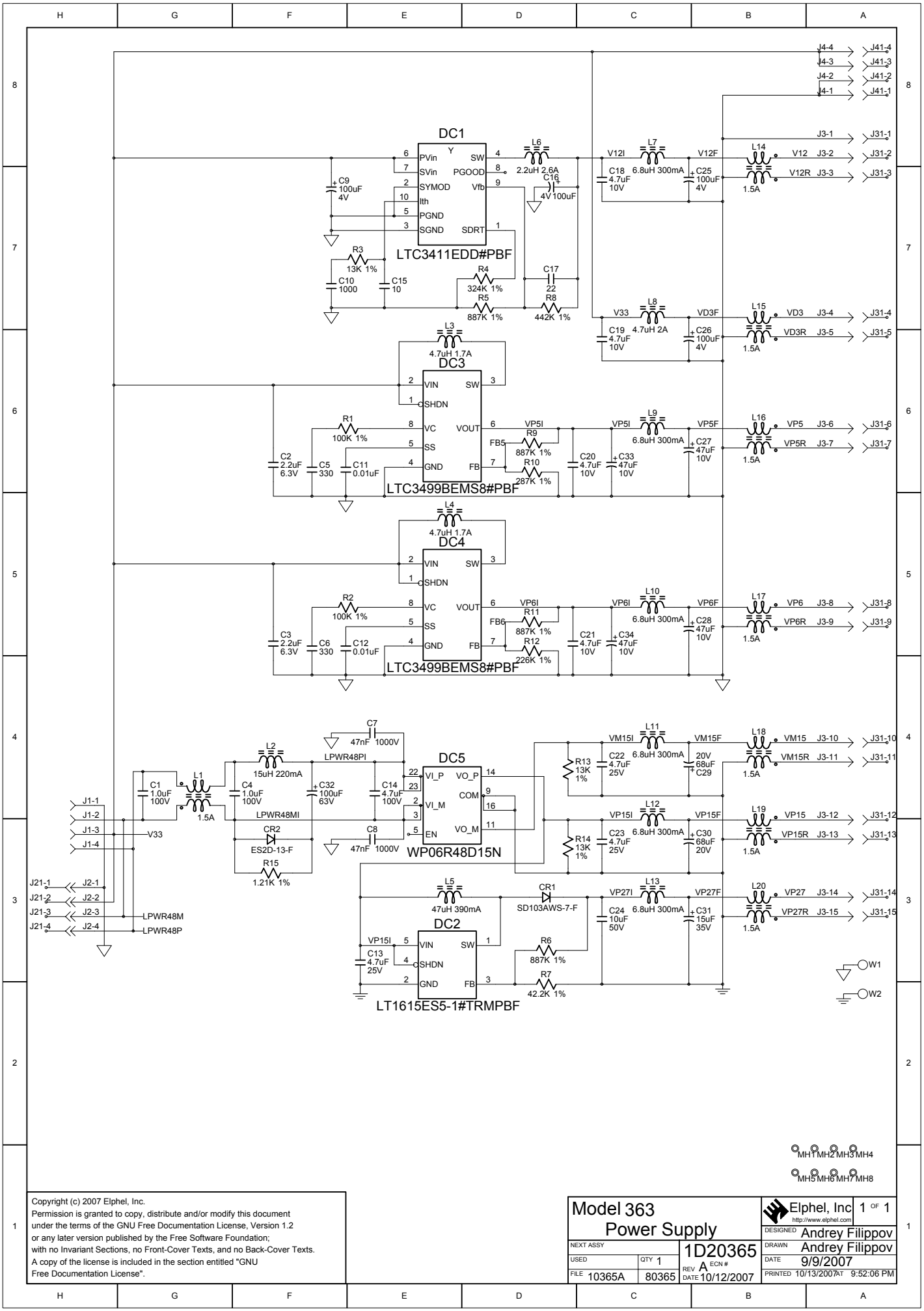

Copyright (c) 2007 Elphel, Inc.
Permission is granted to copy, distribute and/or modify this document
under the terms of the GNU Free Documentation License, Version 1.2
or any later version published by the Free Software Foundation;
with no Invariant Sections, no Front-Cover Texts, and no Back-Cover Texts.
A copy of the license is included in the section entitled "GNU
Free Documentation License".

Model 363 Power Supply		Elphel, Inc http://www.elphel.com	1 OF 1
NEXT ASSY	1D20365	DESIGNED	Andrey Filippov
USED	QTY 1	DRAWN	Andrey Filippov
FILE 10365A 80365	REV A ECN # DATE 10/12/2007	DATE	9/9/2007
		PRINTED	10/13/2007 AT 9:52:06 PM

						SUB-ASSEMBLY								
						---		---						
	USAGE	#		NO.		**4A20365**	RELEASE DATE	**10/13/07**	P/L	REV.	REV.	Units to	Total	Cost per
									DATE	LTR	DATE	Build	Cost	Unit
	363	1		TITLE		**Model 363 Power Supply**			---	---	---	---	---	---
						PCB Assembly 80365	JOB#	**N/A**	9/9/2007	A	#######	**1**	**$220.06**	**$220.06**
			# TO	MFGR		**1**	WORK ORDER #	**N/A**						
			NEXT	ASSY		4A-?????	NON STANDARD							
							NOTATIONS							
DESIGNATOR	ITEM	QTY	EXT	STK	ROHS		PART	MANUFAC		VENDOR	PURCH	UNIT		NEW
NUMBER	#	REQ	QTY	CHK		DESCRIPTION	#	TURER	VENDOR	PART #	QTY	PRICE	TOTAL	STOCK
---	---	---	---	---	---	---	---	---	---	---	---	---	---	---
---	---	---	---	---	---	**Related Documents**	---	---	---	---	---	---	---	---
	0.5	1	1			Schematic 10365a (80365), Model 363	1D20365 Rev.A	Designed by Andrey Filippov						
	20	1	1			Fabrication (80365), Model 363	4F20365 Rev.A							
	21	1	1			Artwork (80365), Model 363	4G20365 Rev.A							
---	---	---	---	---	---	**Power Supply Modules**	---	---	---	---	---	---	---	---
DC5	40	1	1			DC-DC Converter, Isolated, Dual Output, **15V**, **6W**, WP06RD	WP06R48D15N	Newport	Mouser	580-WP06R48D15N	1	30.46	30.46	0
DC2	41	1	1		Y	Micropower Step-Up DC/DC Synchronous Converter in ThinSOT, **100mA**, SOT-23-5, marked as **LTKH**	LT1615ES5-1#TRMPBF	Linear Technology	Digi-Key	LT1615ES5-1#TRMPBFCT-ND	1	4.14	4.14	0
DC1	42	1	1		Y	Step-Down DC/DC Converter, Synchronous, 4MHz, **Y**, **1.25A**, DFN-10, marked as **LADT**	LTC3411EDD#PBF	Linear Technology	Digi-Key	LTC3411EDD#PBF-ND	1	6.4	6.4	0
DC3-DC4	43	2	2		Y	Step-Up DC/DC Synchronous Converter, **750mA**, MS-8, marked as **LTCFB**	LTC3499BEMS8#PBF	Linear Technology	Linear Technology		2	3.07	6.14	0
---	---	---	---	---	---	**Diodes**	---	---	---	---	---	---	---	---
CR1	44	1	1		Y	Shottky Diode, **40V**, **350mA**, SOD-323, marked as **LM**	SD103AWS-7-F	Diodes Inc	Digi-Key	SD103AWS-FDICT-ND	1	0.6	0.6	0
CR2	45	1	1		Y	Surface Mount Ultra Super-Recovery Rectufier, **200V**, **2A**, SMA	ES2D-13-F	Diodes Inc	Digi-Key	ES2D-FDICT-ND	1	0.86	0.86	0
---	---	---	---	---	---	**Resistors**	---	---	---	---	---	---	---	---
R15	46	1	1		Y	Resistor, **1.21KΩ**, **±1%**, SMD 0402, marked as **1211**	RC0402FR-071K21L	Yageo	Digi-Key	311-1.21KLRCT-ND	10	0.094	0.94	9
R3, R13-R14	47	3	3		Y	Resistor, **13KΩ**, **±1%**, SMD 0402, marked as **1302**	RC0402FR-0713KL	Yageo	Digi-Key	311-13.0KLRCT-ND	10	0.094	0.94	7
R7	48	1	1		Y	Resistor, **42.2KΩ**, **±1%**, SMD 0402, marked as **4222**	RC0402FR-0742K2L	Yageo	Digi-Key	311-42.2KLRCT-ND	10	0.094	0.94	9

DESIGNATOR NUMBER	ITEM #	QTY REQ	EXT QTY	STK CHK	ROHS	DESCRIPTION	PART #	MANUFACTURER	VENDOR	VENDOR PART #	PURCH QTY	UNIT PRICE	TOTAL	NEW STOCK
R1-R2	49	2	2		Y	Resistor, **100KΩ**, **±1%**, SMD 0402, marked as **1003**	RC0402FR-07100KL	Yageo	Digi-Key	311-100KLRCT-ND	10	0.094	0.94	8
R12	50	1	1		Y	Resistor, **226KΩ**, **±1%**, SMD 0402, marked as **2263**	RC0402FR-07226KL	Yageo	Digi-Key	311-226KLRCT-ND	10	0.094	0.94	9
R10	51	1	1		Y	Resistor, **287KΩ**, **±1%**, SMD 0402, marked as **2873**	ERJ-2RKF2873X	Panasonic	Digi-Key	P287KLCT-ND	10	0.098	0.98	9
R4	52	1	1		Y	Resistor, **324KΩ**, **±1%**, SMD 0402, marked as **3243**	ERJ-2RKF3243X	Panasonic	Digi-Key	P324KLCT-ND	10	0.098	0.98	9
R8	53	1	1		Y	Resistor, **442KΩ**, **±1%**, SMD 0402, marked as **4423**	RC0402FR-07442KL	Yageo	Digi-Key	311-442KLRCT-ND	10	0.094	0.94	9
R5-R6, R9, R11	54	4	4		Y	Resistor, **887KΩ**, **±1%**, SMD 0402, marked as **8873**	ERJ-2RKF8873X	Panasonic	Digi-Key	P887KLCT-ND	10	0.098	0.98	6
---	---	---	---	---	---	**Capacitors**	---	---	---	---	---	---	---	---
C9, C16, C25-C26	55	4	4		Y	Low ESR Tantalum Chip Capacitor with Polymer Electrode, **100µF**, **4V**, SMD B	TCJB107M004R0070	AVX Corporation	Digi-Key	478-3129-1-ND	4	1.1	4.4	0
C2-C3	56	2	2		Y	Capacitor, Ceramic Chip, **2.2µF**, **6.3V**, C-0402	GRM155R60J225ME15D	Murata	Digi-Key	490-4519-1-ND	10	0.371	3.71	8
C18-C21	57	4	4		Y	Capacitor, Ceramic Chip, **4.7µF**, **10V**, C-0603	GRM188F51A475ZE20D	Murata	Digi-Key	490-3302-1-ND	10	0.185	1.85	6
C27-C28, C33-C34	58	4	4		Y	Low ESR, Industrial Grade Tantalum Chip Capacitor, **47µF**, **10V**, 3528-21	T494B476M010AT	Kemet	Digi-Key	399-3839-1-ND	4	1.39	5.56	0
C29-C30	59	2	2		Y	Industrial Grade Tantalum Chip Capacitor, **68µF**, **20V**, 7343-31	T491D686K020AT	Kemet	Digi-Key	399-3803-1-ND	2	1.39	2.78	0
C13, C22-C23	60	3	3		Y	Capacitor, Ceramic Chip, **4.7µF**, **25V**, C-0805	GRM21BF51E475ZA01L	Murata	Digi-Key	490-3345-1-ND	3	0	0	0
C31	61	1	1		Y	Industrial Grade Tantalum Chip Capacitor, **15µF**, **35V**, 7343-31	T491D156K035AT	Kemet	Digi-Key	399-3775-1-ND	1	0.78	0.78	0
C5-C6	62	2	2		Y	Capacitor, Ceramic Chip, **330pF**, **50V**, C-0402	C0402C331K5RACTU	Kemet	Digi-Key	399-1023-1-ND	2	0	0	0
C10	63	1	1		Y	Capacitor, Ceramic Chip, **1000pF**, **50V**, C-0402	C0402C102K5RACTU	Kemet	Digi-Key	399-1032-1-ND	10	0.055	0.55	9
C11-C12	64	2	2		Y	Capacitor, Ceramic Chip, **0.01µF**, **50V**, C-0402	GRM155R71H103KA88D	Murata	Digi-Key	490-4516-1-ND	10	0.021	0.21	8
C24	65	1	1		Y	Capacitor, Ceramic Chip, **10µF**, **50V**, C-1210	GRM32DF51H106ZA01L	Murata	Digi-Key	490-1891-1-ND	10	1.124	11.24	9
C32	66	1	1		Y	Aluminum Electrolytic Capacitor, SMT, 125C, **100µF**, **63V**, CASE-G	EEE-TG1J101UP	Panasonic	Digi-Key	PCE4086CT-ND	5	1.074	5.37	4
C1, C4	67	2	2		Y	Capacitor, Ceramic Chip, **1µF**, **100V**, C-1206	GRM31CR72A105KA01	Murata	Digi-Key	490-3909-1-ND	10	1.007	10.07	8
C14	68	1	1		Y	Capacitor, Ceramic Chip, **4.7µF**, **100V**, C-2220	GRM55ER72A475KA01	Murata	Digi-Key	490-1934-1-ND	10	7.454	74.54	9
C7-C8	69	2	2		Y	Capacitor, Ceramic Chip, **47nF**, **1000V**, C-1812	GRM43DR73A473KW01L	Murata	Digi-Key	490-3504-1-ND	10	2.32	23.2	8

DESIGNATOR NUMBER	ITEM #	QTY REQ	EXT QTY	STK CHK	ROHS	DESCRIPTION	PART #	MANUFACTURER	VENDOR	VENDOR PART #	PURCH QTY	UNIT PRICE	TOTAL	NEW STOCK
---	---	---	---	---	---	---	---	---	---	---	---	---	---	---
C15	70	1	1		Y	Capacitor, Ceramic Chip, **10pF**, C-0402	CC0402JRNPO9BN100	Yageo	Digi-Key	311-1014-1-ND	10	0.077	0.77	9
C17	71	1	1		Y	Capacitor, Ceramic Chip, **22pF**, C-0402	CC0402JRNPO9BN220	Yageo	Digi-Key	311-1018-1-ND	10	0.088	0.88	9
---	---	---	---	---	---	**Inductors and LC filters**	---	---	---	---	---	---	---	---
L6	72	1	1		Y	SMD Inductor, **2.2µHn**, **2.6A**, VLCF5020T	VLCF5020T-2R2N6-1	TDK	Digi-Key	445-3204-1-ND	1	0.81	0.81	0
L8	73	1	1		Y	SMD Inductor, **4.7µHn**, **2A**, ELL6SH	ELL-6SH4R7M	Panasonic	Digi-Key	PCD1366CT-ND	1	1.22	1.22	0
L3-L4	74	2	2		Y	SMD Inductor, **4.7µHn**, **1.7A**, VLCF5020T	VLCF5020T-4R7N1R7-1	TDK	Digi-Key	445-3207-1-ND	2	0.81	1.62	0
L7, L9-L13	75	6	6		Y	SMD Inductor, **6.8µHn**, **300mA**, L-1210	ELJ-PA6R8MF	Panasonic	Digi-Key	PCD1483CT-ND	6	0.27	1.62	0
L2	76	1	1		Y	SMD Inductor, **15µHn**, **220mA**, L-1210	ELJ-PA150KF	Panasonic	Digi-Key	PCD1486CT-ND	1	0.28	0.28	0
L5	77	1	1		Y	SMD Inductor, **47µHn**, **390mA**, VLCF4020T	VLCF4020T-470MR39	TDK	Digi-Key	445-3191-1-ND	1	0.77	0.77	0
L1, L14-L20	78	8	8		Y	SMD Common Mode Choke, **1.5A**, 2020-4	DLW5BTN142SQ2L	Murata	Digi-Key	490-4017-1-ND	8	0	0	0
---	---	---	---	---	---	**Connectors**	---	---	---	---	---	---	---	---
J31	79	1	1		Y	1.25mm Pitch Super Low profile Crimping Connector, 15 pos., Crimp Socket, **150V**, **1A**, DF1415S125C	DF14-15S-1.25C	Hirose	Digi-Key	H1572-ND	1	0.55	0.55	0
J3	80	1	1		Y	1.25mm Pitch Super Low profile Crimping Connector, 2 pins, Right angle SMT header, 15 contacts, **150V**, **1A**, DF14A15P125H	DF14A-15P-1.25H-55	Hirose	Digi-Key	H10331-ND	1	2.31	2.31	0
J4	81	1	1		Y	1.25mm Pitch Super Low profile Crimping Connector, 2 pins, Right angle SMT header, 4 contacts, **150V**, **1A**, DF14A4P125H	DF14A-4P-1.25H-55	Hirose	Digi-Key	H10343-ND	1	1.48	1.48	0
J41	82	1	1		Y	1.25mm Pitch Super Low profile Crimping Connector, 4 pos., Crimp Socket, **150V**, **1A**, DF144S125C	DF14-4S-1.25C	Hirose	Digi-Key	H1565-ND	1	0.51	0.51	0
J2	83	1	1		Y	Connector header, Micro-Fit 3.0, SMT, Right-Angle, 8 contacts, **250V**, **5A**, 43650-0410	43650-0410	Molex	Digi-Key	43650-0410	1	4.04	4.04	0
J21	84	1	1		Y	Connector receptacle Micro-Fit 3.0, Crimp Housing, 8 contacts, **250V**, **5A**, 43645-0400	43645-0400	Molex	Digi-Key	WM1847-ND	1	0.56	0.56	0
J1	85	1	1		Y	Connector Receptacle Low profile Milli-Grid 2mm, 2 rows, 2 contacts, **500V**, **2A**, SMD 873400424	873400424	Molex	Digi-Key	WM18688-ND	1	1.2	1.2	0
---	---	---	---	---	---	**Sockets and Matching Parts**	---	---	---	---	---	---	---	---

DESIGNATOR NUMBER	ITEM #	QTY REQ	EXT QTY	STK CHK	ROHS	DESCRIPTION	PART #	MANUFAC TURER	VENDOR	VENDOR PART #	PURCH QTY	UNIT PRICE	TOTAL	NEW STOCK
---	---	---	---	---	---	---	---	---	---	---	---	---	---	---
XJ31, XJ41	86	19	19			1.25mm Pitch Super Low profile Crimping Connector, 26-28AWG Crimp Gold Terminal, DF142628SCFA	DF14-2628SCFA	Hirose	Digi-Key		0	0	0	-19
XJ21	87	4	4			Connector Terminal, Micro-Fit 3.0, Female, 20-24AWG, Gold, 43030-0002	43030-0002	Molex	Digi-Key		0	0	0	-4

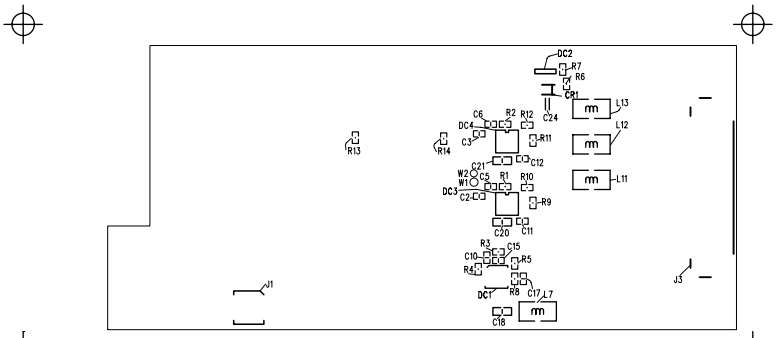

SILKSCREEN TOP			

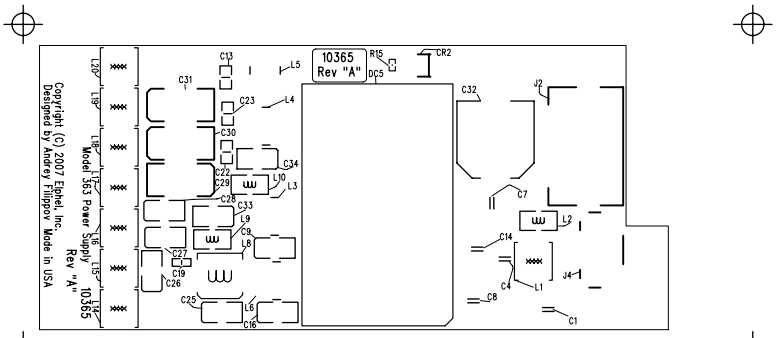
Copyright (C) 2007 Ephel, Inc.
Designed by Andrey Filipov Made in USA
Model 363 Power Supply
Rev "A"
10365
10365
Rev "A"
C13
L5
C31
C23
L4
C30
C22
C29
C28
C34
L10
L3
C33
L9
C8
L8
C27
C19
C26
C25
L6
C16
R15
DC5
CR2
C32
J2
C7
L2
C14
C4
L1
J4-1
C8
C1
SILKSCREEN BOTTOM

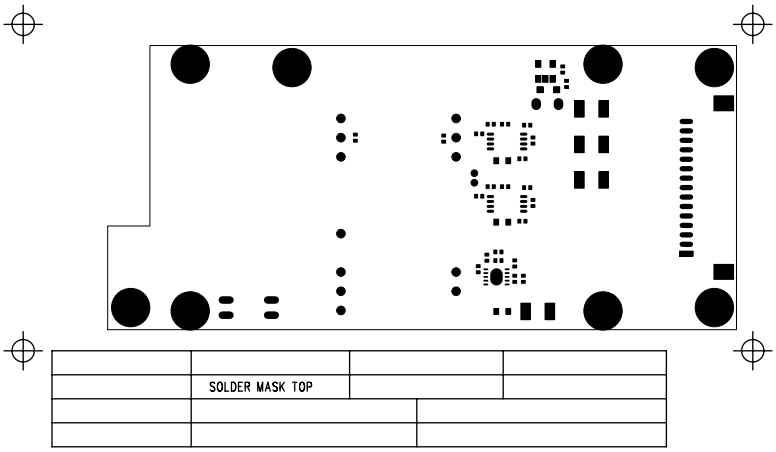

SolderTop.pho - Sat Oct 13 22:11:49 2007

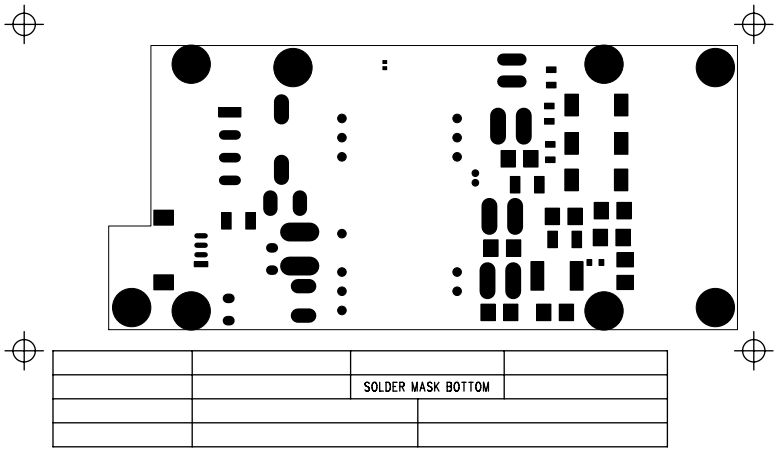

SolderBottom.pho - Sat Oct 13 22:12:28 2007

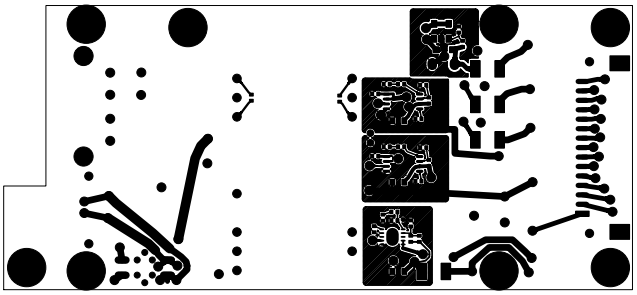

TOP SIDE (LAYER-1)			
	COMPONENT COPPER TOP (L-18)		

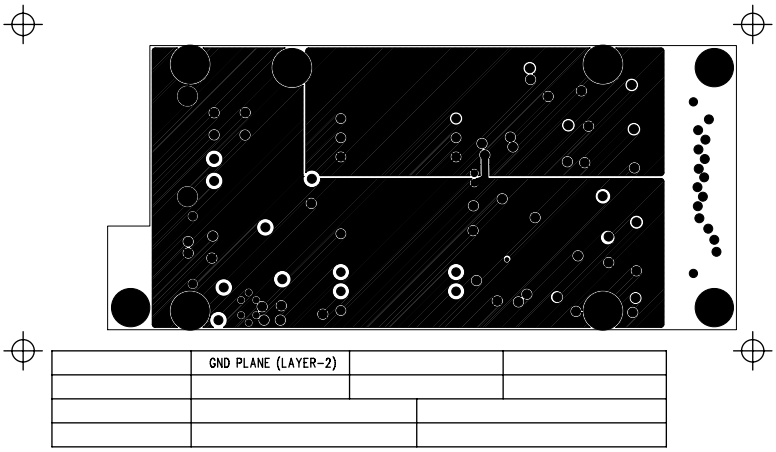

RoutingGround.pho - Sat Oct 13 22:14:56 2007

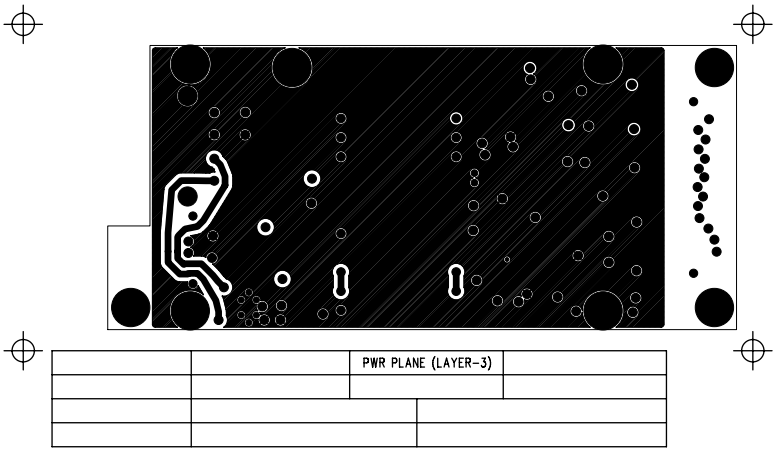

RoutingPower.pho - Sat Oct 13 22:16:19 2007

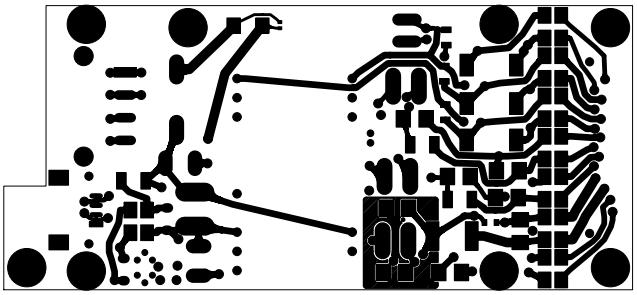

			BOTTOM SIDE (LAYER-4)
		COMPONENT COPPER BOTTOM (L-19)	

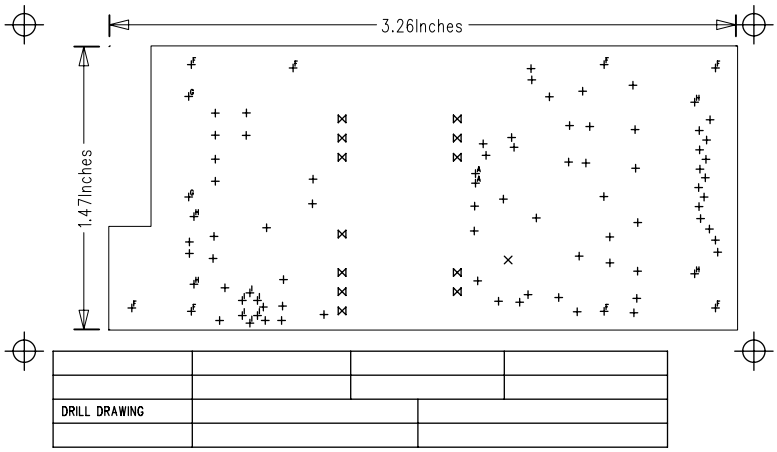

SIZE	QTY	SYM	PLTD
32	68	+	PLTD
10	1	×	PLTD
23	12	⋈	PLTD
25	2	A	PLTD
87	8	F	NPLTD
100	2	G	NPLTD
43.31	4	H	NPLTD
31.5	6	I	NPLTD

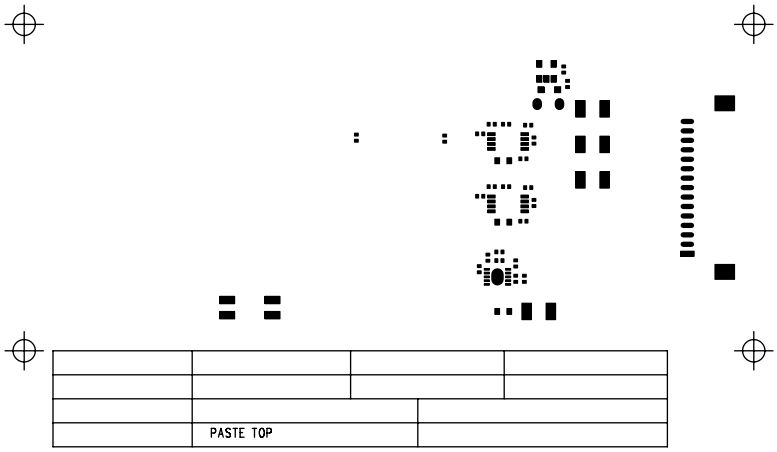

PasteTop.pho - Sat Oct 13 22:18:34 2007

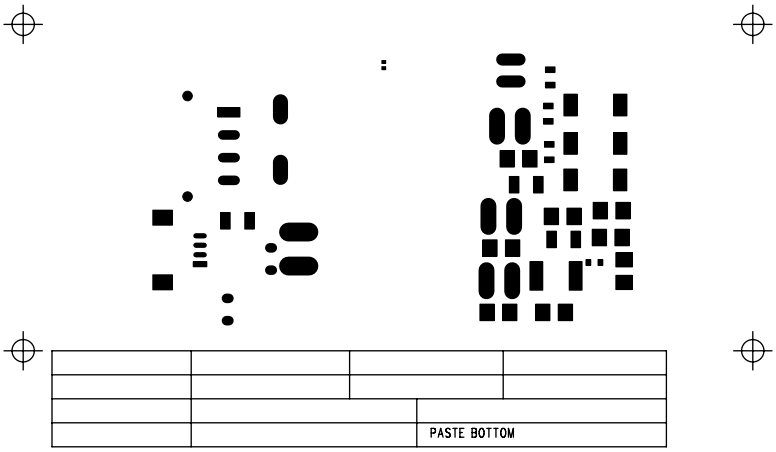

PasteBottom.pho – Sat Oct 13 22:20:12 2007