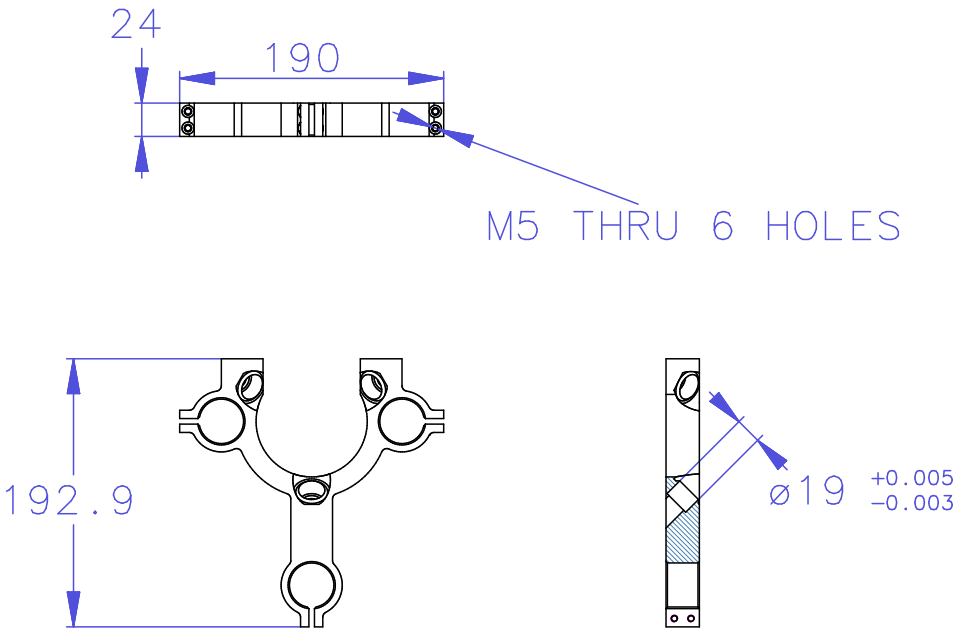

Revision	Part #	Description
B	0353-22-18	Bottom rollers bracket

Material	Aluminum 6061		
Finish	Black Anodize	Serial No.	
Weight(g)	406.5	Assembly No.	
Surface		Date	11/14/2011
		Scale	1:5

Copyright (c) 2011 Elphel, Inc.
Licensed under CERN OHL v.1.1 or later - see http://ohwr.org/cernohl

Permission is also granted to copy, distribute and/or modify this document under the terms of the GNU Free Documentation License, Version 1.3 or any later version published by the Free Software Foundation; with no Invariant Sections, no Front-Cover Texts, and no Back-Cover Texts. A copy of the license is included in the section entitled "GNU Free Documentation License".

Notes