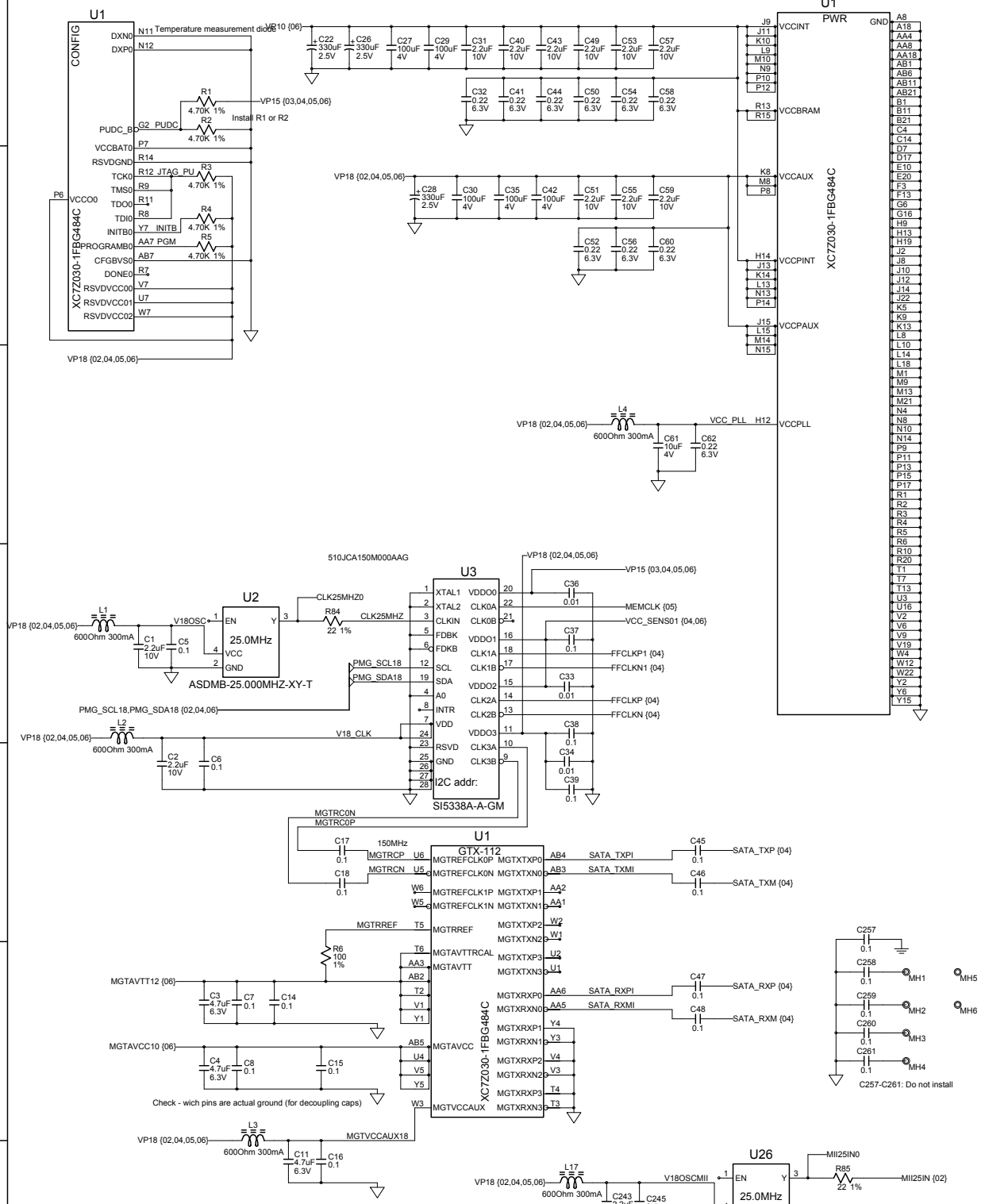

pOWER - USE 2X8A module (2x4A?) for 1.0+1.8V
Use LTC3589 for 1.5V@1.6A (DDR3- all), 2 other buck - 2 HR baanks VCCO set at 1.5V initial (1.34V..2.789V)
LDO - PLL. ADC, ???

PUDC_B - 0 - enable weak pullup during config (PS)

VCCPINT (PS) - 1.0V

VCCPAUX (PS) - 1.8V

VCCO_MIO0 (PS) - 1.8V
VCCO_MIO1 (PS) - 1.8V

VCCO_DDR (PS) - 1.5V

VCC_PLL(PS) - 1.8V
VCC_AUX (PL) - 1.8V
VCCAUX_IO_G# - not used in this package
VCCBRAM (PL) 1.0V
VCCBATT is required only when using bitstream encryption. If battery is not used, connect VCCBATT to either GND or VCCAUX

PS_MIO_VREF - 0.9V (VCCMIO1/2) - done

After boot "SHUT_DOWN" will be pulled low by a resitor, so CLOCK_ALARM will be low (on) keeping input DC-DC on
When input power is re-applied to the DC-DC (after being off) Q2 will be kept off while capacitor is charging

Copyright (c) 2013 Elphel, Inc.
Licensed under CERN OHL v.1.1 or later, see http://ohwr.org/cernohl
Permission is also granted to copy, distribute and/or modify this document under the terms of the GNU Free Documentation License, Version 1.3 or any later version published by the Free Software Foundation; with no Invariant Sections, no Front-Cover Texts, and no Back-Cover Texts. A copy of the license is included in the section entitled "GNU Free Documentation License".

SHUT_DOWN - one of the unused MIO (GPIO) pins

Model 393 Camera System Board		Elphel, Inc http://www.elphel.com	1 OF 6
NEXT ASSY	1D20393	DESIGNED	Andrey Filippov
USED	QTY 1	DRAWN	Andrey Filippov
FILE 10393	80393	REV 0 ECN # DATE	DATE 03/05/2013
			PRINTED 8/2/2013 AT 1:10:10 PM

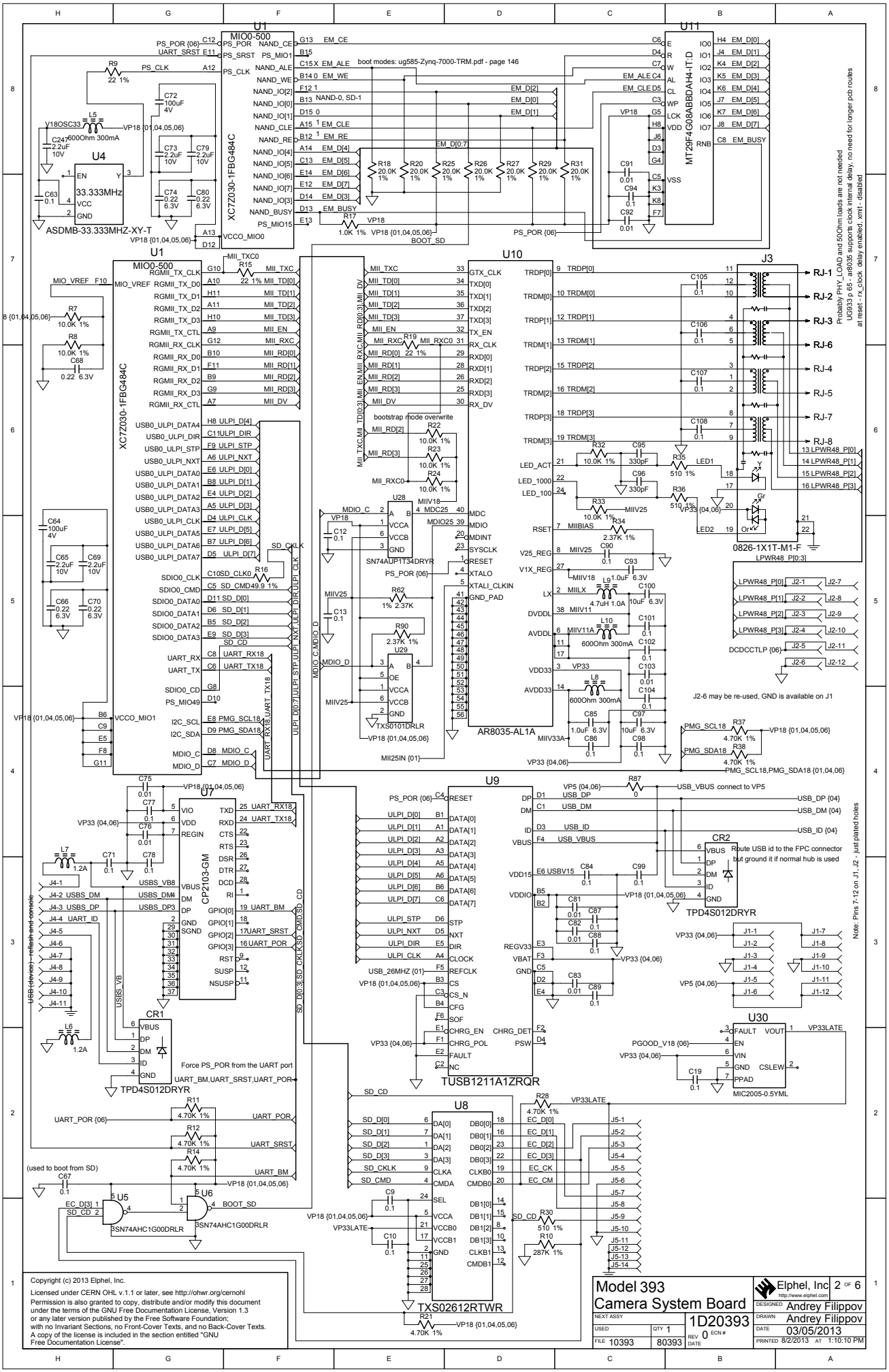
U1
XC7Z030-1FBG484C
U11
MT29F4G08ABBDAH4-IT:D
U4
ASDMB-33.333MHZ-XY-T
U10
AR8035-AL1A
J3
0826-1X1T-M1-F
U7
CP2103-GM
U9
TUSB1211A1ZRQR
U8
TXS02612RTWR
U30
MIC2005-0.5YML
CR1
TPD4S012DRYR
CR2
TPD4S012DRYR
U5
U6
3SN74AHC1G00DRLR
U28
U29
SN74AUP1T34DRYR
TXS0101DRLR
boot modes: ug585-Zynq-7000-TRM.pdf - page 146
Probably PHY_LOAD and 50Ohm loads are not needed
UG933 p 65 - ar8035 supports clock internal delay, no need for longer pcb routes
at reset - rx_clock, delay enabled, xmit - disabled
bootstrap mode overwrite
J2-6 may be re-used, GND is available on J1
Route USB id to the FPC connector
but ground it if normal hub is used
Force PS_POR from the UART port
Note: Pins 7-12 on J1, J2 - just plated holes
USB (device) - refresh and console
(used to boot from SD)
Model 393
Camera System Board
Elphel, Inc
http://www.elphel.com
2 OF 6
DESIGNED Andrey Filippov
DRAWN Andrey Filippov
DATE 03/05/2013
PRINTED 8/2/2013 AT 1:10:10 PM
NEXT ASSY
USED
QTY 1
1D20393
REV 0
ECN #
DATE
FILE 10393
80393
Copyright (c) 2013 Elphel, Inc.
Licensed under CERN OHL v.1.1 or later, see http://ohwr.org/cernohl
Permission is also granted to copy, distribute and/or modify this document
under the terms of the GNU Free Documentation License, Version 1.3
or any later version published by the Free Software Foundation;
with no Invariant Sections, no Front-Cover Texts, and no Back-Cover Texts.
A copy of the license is included in the section entitled "GNU
Free Documentation License".

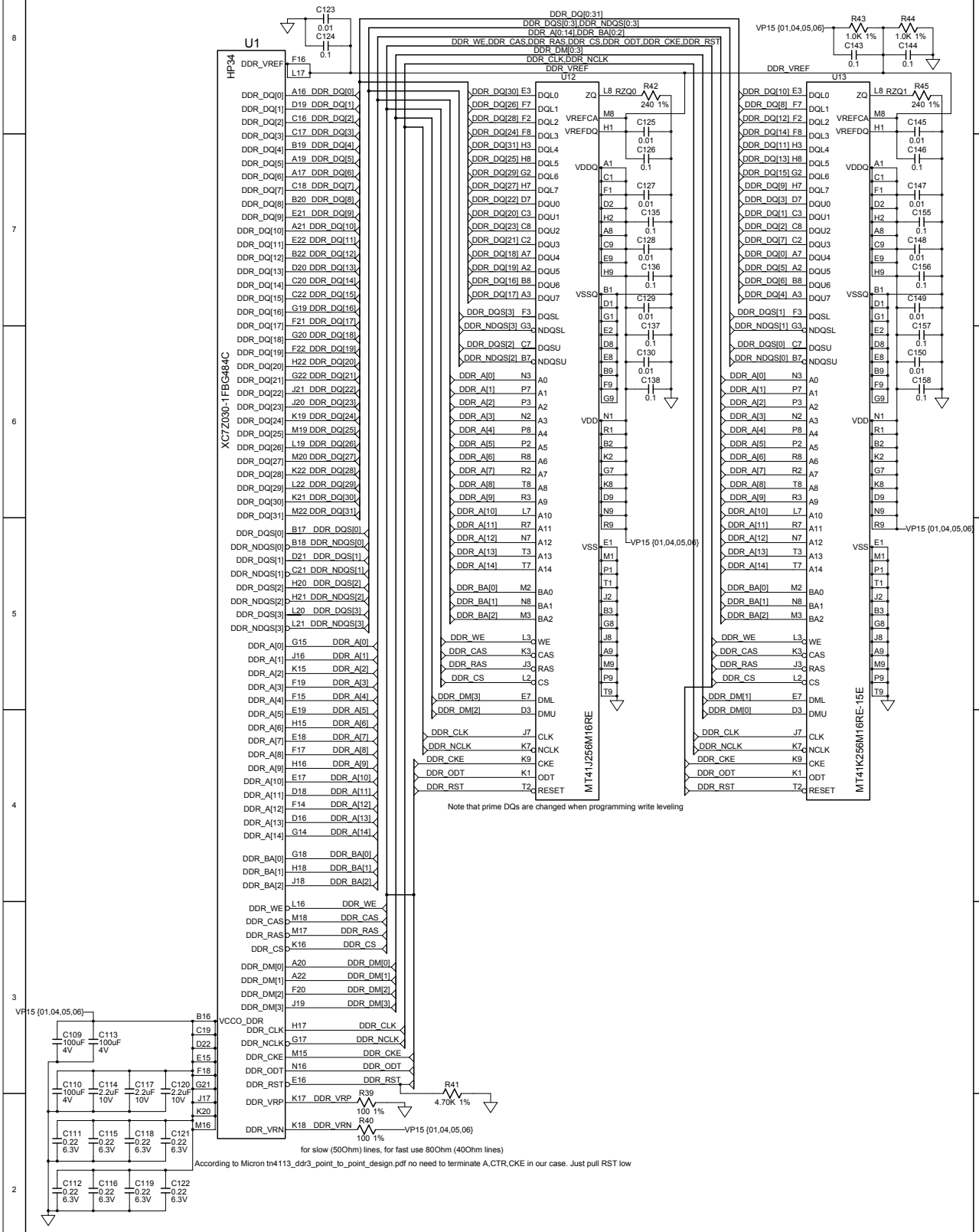

Copyright (c) 2013 Elphel, Inc.
Licensed under CERN OHL v.1.1 or later, see http://ohwr.org/cernohl
Permission is also granted to copy, distribute and/or modify this document under the terms of the GNU Free Documentation License, Version 1.3 or any later version published by the Free Software Foundation; with no Invariant Sections, no Front-Cover Texts, and no Back-Cover Texts. A copy of the license is included in the section entitled "GNU Free Documentation License".

Model 393 Camera System Board		Elphel, Inc http://www.elphel.com	3 OF 6
NEXT ASSY	1D20393	DESIGNED	Andrey Filippov
USED	QTY 1	DRAWN	Andrey Filippov
FILE 10393	80393	REV 0 ECN# DATE	DATE 03/05/2013
			PRINTED 8/2/2013 AT 1:10:10 PM

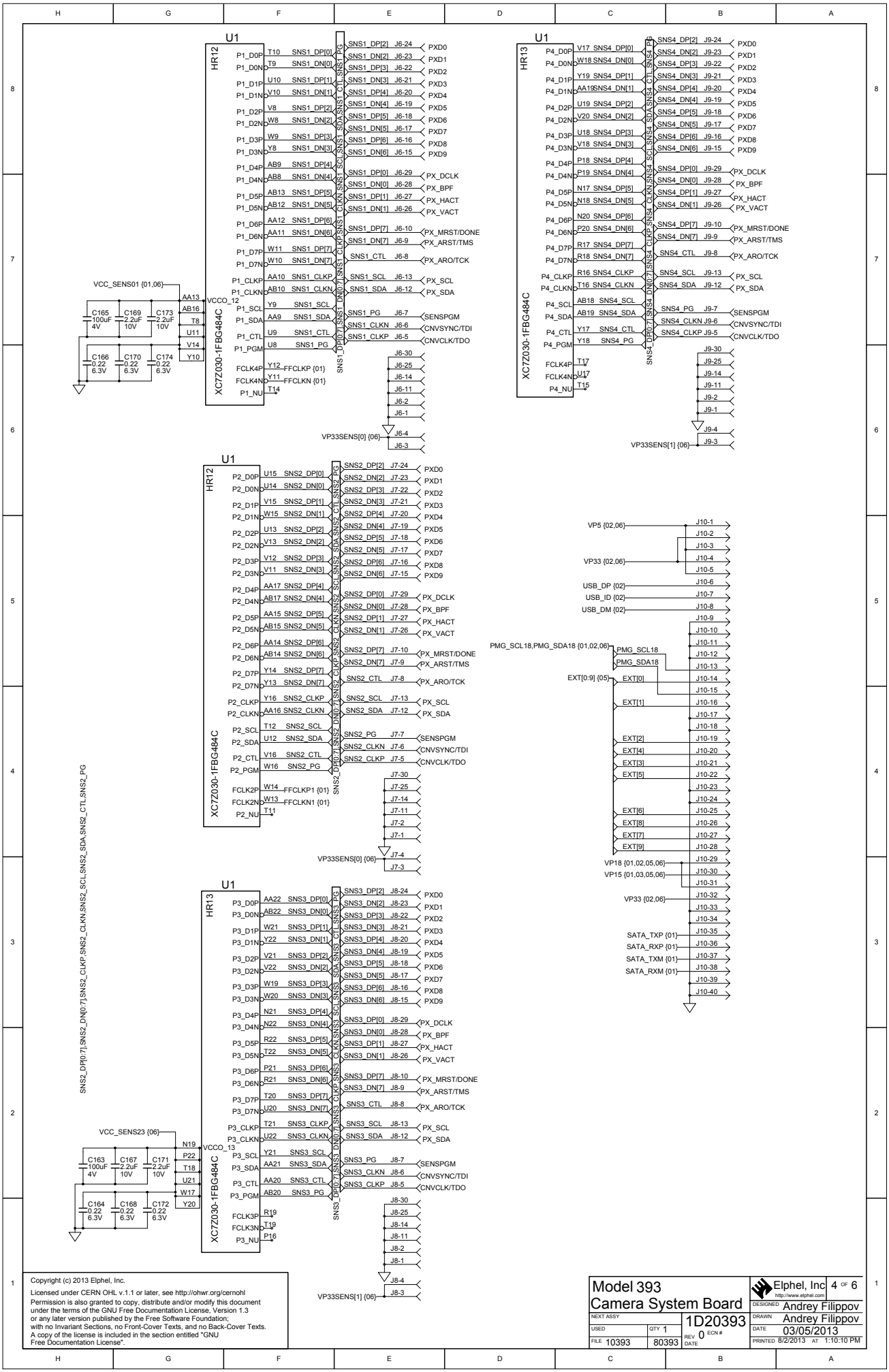

Copyright (c) 2013 Elphel, Inc.
Licensed under CERN OHL v.1.1 or later, see http://ohwr.org/cernohl
Permission is also granted to copy, distribute and/or modify this document under the terms of the GNU Free Documentation License, Version 1.3 or any later version published by the Free Software Foundation; with no Invariant Sections, no Front-Cover Texts, and no Back-Cover Texts. A copy of the license is included in the section entitled "GNU Free Documentation License".

Model 393 Camera System Board		Elphel, Inc http://www.elphel.com	4 OF 6
NEXT ASSY	1D20393	DESIGNED	Andrey Filippov
USED	QTY 1	DRAWN	Andrey Filippov
FILE 10393	80393	REV 0 ECN # DATE	DATE 03/05/2013
			PRINTED 8/2/2013 AT 1:10:10 PM

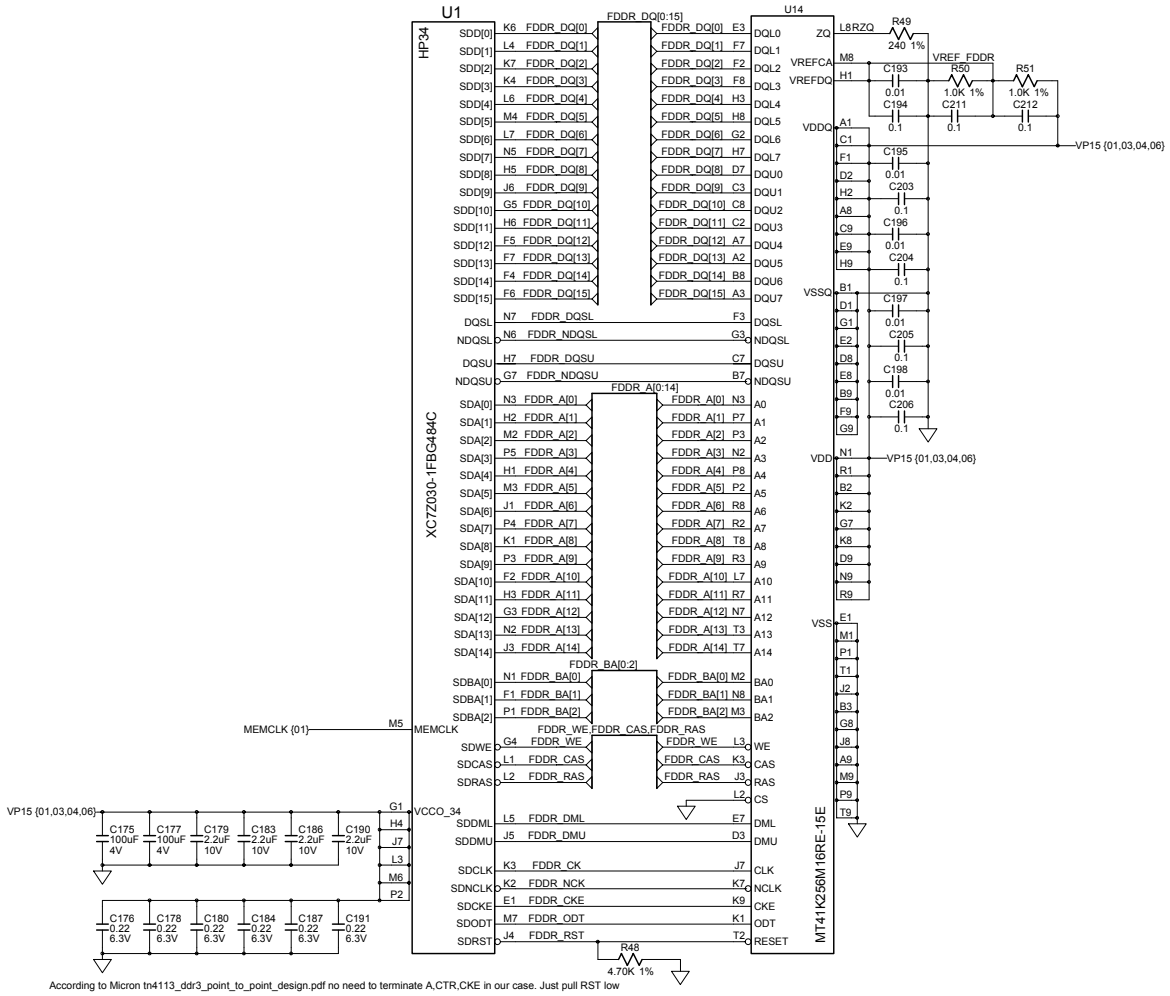

According to Micron tn4113_ddr3_point_to_point_design.pdf no need to terminate A,CTR,CKE in our case. Just pull RST low

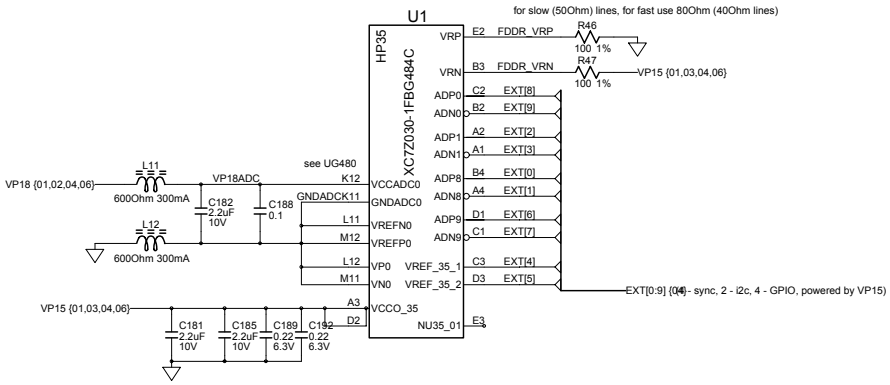

Does VCCO_35 have to be 1.5V to use DCI cascade?

Yes, have to have save VCCO, same Vref (UG471_7)

Copyright (c) 2013 Elphel, Inc.

Licensed under CERN OHL v.1.1 or later, see http://ohwr.org/cernohl
Permission is also granted to copy, distribute and/or modify this document under the terms of the GNU Free Documentation License, Version 1.3 or any later version published by the Free Software Foundation; with no Invariant Sections, no Front-Cover Texts, and no Back-Cover Texts. A copy of the license is included in the section entitled "GNU Free Documentation License".

Model 393 Camera System Board		Elphel, Inc http://www.elphel.com	5 OF 6
NEXT ASSY	1D20393	DESIGNED	Andrey Filippov
USED	QTY 1	DRAWN	Andrey Filippov
FILE 10393	80393 REV 0 ECN # DATE	DATE	03/05/2013
		PRINTED 8/2/2013 AT 1:10:10 PM	

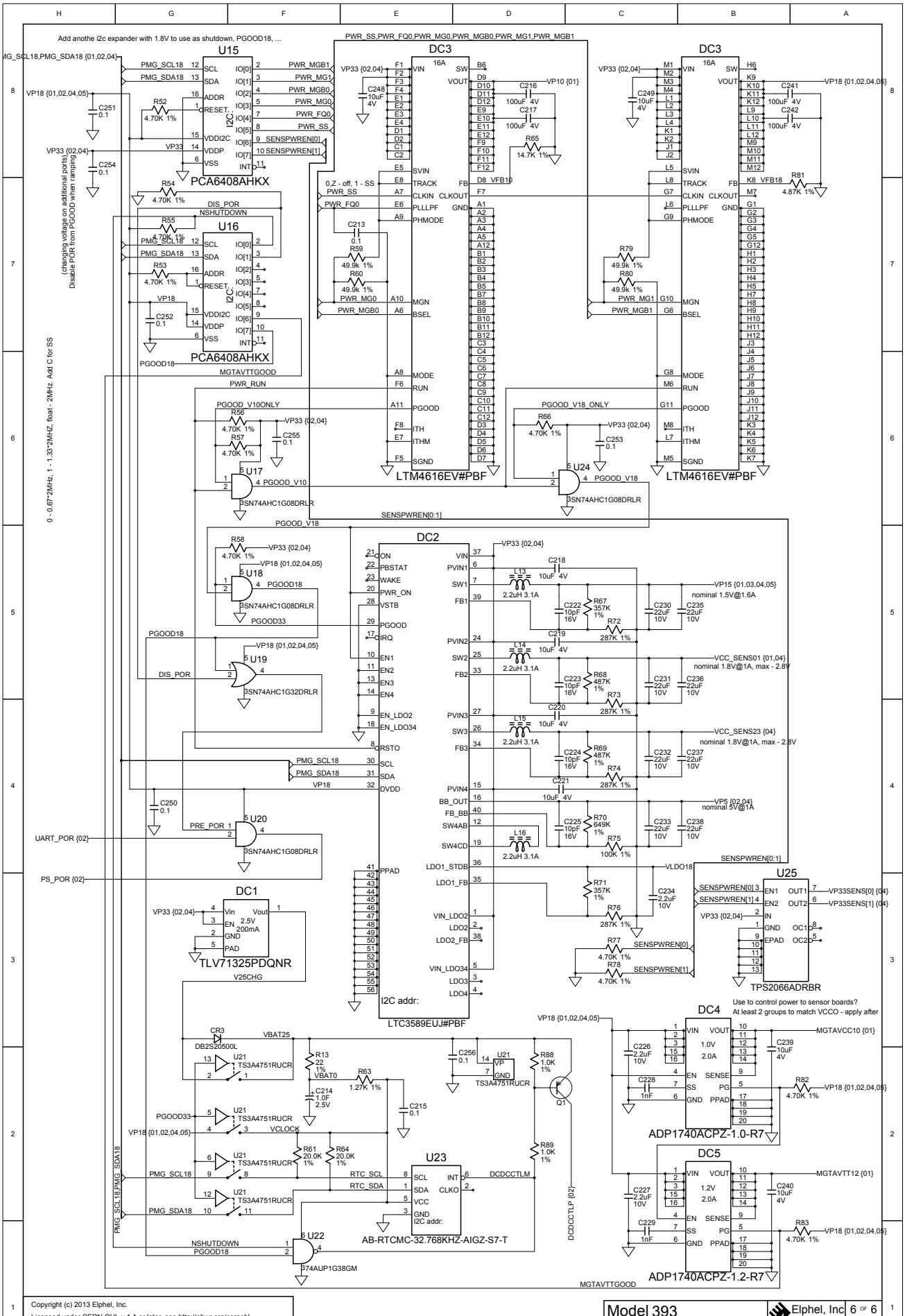

Copyright (c) 2013 Elphel, Inc.
Licensed under CERN OHL v.1.1 or later, see http://ohwr.org/cernohl
Permission is also granted to copy, distribute and/or modify this document under the terms of the GNU Free Documentation License, Version 1.3 or any later version published by the Free Software Foundation; with no Invariant Sections, no Front-Cover Texts, and no Back-Cover Texts. A copy of the license is included in the section entitled "GNU Free Documentation License".

Model 393 Camera System Board		Elphel, Inc http://www.elphel.com	6 OF 6
NEXT ASSY	1D20393	DESIGNED	Andrey Filippov
USED	QTY 1	DRAWN	Andrey Filippov
FILE 10393	80393 REV 0 ECN # DATE	DATE	03/05/2013
		PRINTED 8/2/2013 AT 1:10:10 PM	

						SUB-ASSEMBLY								
						---		---						
	USAGE	#		NO.		**4A20393**	RELEASE DATE	**08/01/13**	P/L	REV.	REV.	Units to	Total	Cost per
									DATE	LTR	DATE	Build	Cost	Unit
	393	1		TITLE		**Model 393 Camera System Board**			---	---	---	---	---	---
						PCB Assembly 80393	JOB#	**N/A**	3/5/2013	0		**1**	**$407.59**	**$407.59**
			# TO	MFGR		**1**	WORK ORDER #	**N/A**						

			NEXT	ASSY		4A-?????	NON STANDARD							
							NOTATIONS							
DESIGNATOR	ITEM	QTY	EXT	STK	ROHS		PART	MANUFAC		VENDOR	PURCH	UNIT		NEW
NUMBER	#	REQ	QTY	CHK		DESCRIPTION	#	TURER	VENDOR	PART #	QTY	PRICE	TOTAL	STOCK
---	---	---	---	---	---	---	---	---	---	---	---	---	---	---
---	---	---	---	---	---	**Related Documents**	---	---	---	---	---	---	---	---
	0.5	1	1			Schematic 10393 (80393), Model 393	1D20393 Rev.0	Designed by Andrey Filippov						
	20	1	1			Fabrication (80393), Model 393	4F20393 Rev.0							
	21	1	1			Artwork (80393), Model 393	4G20393 Rev.0							
---	---	---	---	---	---	**Integrated Circuits**	---	---	---	---	---	---	---	---
U12	40	1	1		Y	DDR3 Synchronous DRAM, 4Gbit (256Mx16), **256MX16**, **1.5V**, FBGA-96	MT41J256M16RE	Micron			0	0	0	-1
U13-U14	41	2	2		Y	DDR3 Synchronous DRAM, 4Gbit (256Mx16), **256MX16**, **1.5V**, FBGA-96	MT41K256M16RE-15E	Micron			0	0	0	-2
U11	42	1	1		Y	4Gb (512Mx8) NAND Flash, **256MX8**, **1.8V**, VFBGA-63-9x11	MT29F4G08ABBDAH4-IT:D	Micron	Avnet		1	8.9016	8.9016	0
U7	43	1	1		Y	USB to UART bridge with GPIO, **3.3V**, QFN-28	CP2103-GM	Silicon Laboratories	Digi-Key	336-1164-ND	1	5.36	5.36	0
U2, U26	44	2	2		Y	Oscillator MEMS, **25MHZ**, OSC4-2520	ASDMB-25.000MHZ-XY-T	Abracon Corporation	Digi-Key	535-11157-1-ND	2	3.64	7.28	0
U27	45	1	1		Y	Oscillator MEMS, **26MHZ**, OSC4-2520	ASDMB-26.000MHZ-XY-T	Abracon Corporation	Digi-Key	535-11158-1-ND	1	3.64	3.64	0
U4	46	1	1		Y	Oscillator MEMS, **33.333MHZ**, OSC4-2520	ASDMB-33.333MHZ-XY-T	Abracon Corporation	Digi-Key	535-11143-1-ND	1	3.64	3.64	0
U22	47	1	1		Y	2 Input NAND Gate, Open Drain, **0.5µA**, XSON-6, marked as **aB**	74AUP1G38GM	NXP Semiconductors	Digi-Key	568-9156-1-ND	1	0.68	0.68	0
U15-U16	48	2	2		Y	8 bit I2C 8-bit I/O port with 3-state outputs, XQFN-16, marked as **P8**	PCA6408AHKX	NXP Semiconductors	Digi-Key	568-9909-1-ND	2	1.7	3.4	0
U25	49	1	1		Y	Dual Current-Limited Power Distribution Switch, SON-8	TPS2066ADRBR	Texas Instruments	Digi-Key	296-23393-1-ND	1	1.78	1.78	0

DESIGNATOR NUMBER	ITEM #	QTY REQ	EXT QTY	STK CHK	ROHS	DESCRIPTION	PART #	MANUFACTURER	VENDOR	VENDOR PART #	PURCH QTY	UNIT PRICE	TOTAL	NEW STOCK
---	---	---	---	---	---	---	---	---	---	---	---	---	---	---
U3	50	1	1		Y	Four Channel MyltiSynth CLock Generator with Single low-jitter PLL, 1.8V, QFN-24-1MM	SI5338A-A-GM	Silicon Laboratories	Digi-Key	336-1553-5-ND	1	20.54	20.54	0
U10	51	1	1		Y	Gigabit Ethernet Transceiver, QFN-40	AR8035-AL1A	Atheros	http://www.arrow.com/		1	10	10	0
U21	52	1	1		Y	Quad SPST-NO Analog Switch, VQFN-14, marked as **3M**	TS3A4751RUCR	Texas Instruments	Digi-Key	296-24478-1-ND	1	1.36	1.36	0
U23	53	1	1		Y	Real Time Clock/Calendar with I2C, **RTC**, WCDFN-8	AB-RTCMC-32.768KHZ-AIGZ-S7-T	Abracon Corporation	Digi-Key	535-12052-1-ND	1	5.14	5.14	0
U8	54	1	1		Y	SDIO port expander, WQFN-24	TXS02612RTWR	Texas Instruments	Digi-Key	296-23869-1-ND	1	1.7	1.7	0
U17-U18, U20, U24	55	4	4		Y	Single 2-AND Gate, SOT-553, marked as **AE?**	SN74AHC1G08DRLR	Texas Instruments	Digi-Key	296-19376-1-ND	1000	0	0	996
U5-U6	56	2	2		Y	Single 2-NAND Gate, SOT-553, marked as **AA_**	SN74AHC1G00DRLR	Texas Instruments	Digi-Key	296-19780-1-ND	1000	0	0	998
U19	57	1	1		Y	Single 2-OR Gate, SOT-553, marked as **AG_**	SN74AHC1G32DRLR	Texas Instruments	Digi-Key	296-19378-1-ND	1	0.54	0.54	0
U29	58	1	1		Y	Single Bidirectional Level Shifter, SOT-563, marked as **2G_**	TXS0101DRLR	Texas Instruments	Digi-Key	296-22865-1-ND	1	0.82	0.82	0
U30	59	1	1		Y	Single Channel Power Distribution Switch, MLF-6, marked as **F05**	MIC2005-0.5YML	Micrel	Digi-Key	576-1678-1-ND	1	1.83	1.83	0
U28	60	1	1		Y	Single Unidirectional Level Shifter, UFDFN-6, marked as **U2**	SN74AUP1T34DRYR	Texas Instruments	Mouser	595-SN74AUP1T34DRYR	1	0.59	0.59	0
U9	61	1	1		Y	USB Transceiver, VFBGA-36	TUSB1211A1ZRQR	Texas Instruments	Digi-Key	296-28357-1-ND	1	2.73	2.73	0
U1	62	1	1		Y	ZZynq 7030 configured for 10393, FBG484	XC7Z030-1FBG484C	Xilinx	Avnet	XC7Z030-1FBG484C	1	150	150	0
---	---	---	---	---	---	**Power Supply Modules**	---	---	---	---	---	---	---	---
DC4	63	1	1		Y	LDO regulator, **1V**, **2A**, VQFN-16	ADP1740ACPZ-1.0-R7	Analog Devices	Digi-Key	ADP1740ACPZ-1.0-R7CT-ND	1	3.11	3.11	0
DC5	64	1	1		Y	LDO regulator, **1.2V**, **2A**, VQFN-16	ADP1740ACPZ-1.2-R7	Analog Devices	Digi-Key	ADP1740ACPZ-1.2-R7CT-ND	1	3.11	3.11	0
DC1	65	1	1		Y	LDO regulator, **2.5V**, **200mA**, X2SON-4, marked as **AZ**	TLV71325PDQNR	Texas Instruments	Digi-Key	296-35468-1-ND	1	0.47	0.47	0
DC3	66	1	1		Y	Dual 8A per Channel Low Vin DC/DC uModule, **16A**, LGA-144	LTM4616EV#PBF	Linear Technology	Digi-Key	LTM4616EV#PBF-ND	1	33.23	33.23	0
DC2	67	1	1		Y	Power Management IC for Li-Ion Powered Systems, VFQFN-40	LTC3589EUJ#PBF	Linear Technology	Digi-Key	LTC3589EUJ#PBF-ND	1	7.3	7.3	0
---	---	---	---	---	---	**Transistors**	---	---	---	---	---	---	---	---
Q1	68	1	1		Y	Transistor PNP, **45V**, **500mA**, SOT-723, marked as **BW**	2SA2030T2L	Rohm	Digi-Key	2SA2030T2LCT-ND	1	0.51	0.51	0

DESIGNATOR NUMBER	ITEM #	QTY REQ	EXT QTY	STK CHK	ROHS	DESCRIPTION	PART #	MANUFACTURER	VENDOR	VENDOR PART #	PURCH QTY	UNIT PRICE	TOTAL	NEW STOCK
---	---	---	---	---	---	---	---	---	---	---	---	---	---	---
---	---	---	---	---	---	**Diodes**	---	---	---	---	---	---	---	---
CR1-CR2	69	2	2		Y	4-Line ESD Protection with Clamp, **5V**, **12A**, **60W**, UFDFN-6, marked as **F5**	TPD4S012DRYR	Texas Instruments	Digi-Key	751-1413-1-ND	2	0.78	1.56	0
CR3	70	1	1		Y	Schottky Barier Diode, **15V**, **200mA**, SOD-523, marked as **BA**	DB2S20500L	Panasonic	Digi-Key	ZHCS500CT-ND	1	0.3	0.3	0
---	---	---	---	---	---	**Resistors**	---	---	---	---	---	---	---	---
R9, R13, R15, R19, R84-R86	71	7	7		Y	Resistor, **22Ω**, **±1%**, SMD 0201, marked as **22R0**	ERJ-1GEF22R0C	Panasonic	Digi-Key	P22.0ABCT-ND	7	0	0	0
R16	72	1	1		Y	Resistor, **49.9Ω**, **±1%**, SMD 0201, marked as **49R9**	ERJ-1GEF49R9C	Panasonic	Digi-Key	P49.9ABCT-ND	10	0.11	1.1	9
R6, R39-R40, R46-R47	73	5	5		Y	Resistor, **100Ω**, **±1%**, SMD 0201, marked as **1000**	ERJ-1GEF1000C	Panasonic	Digi-Key	P100ABCT-ND	10	0.11	1.1	5
R42, R45, R49	74	3	3		Y	Resistor, **240Ω**, **±1%**, SMD 0201, marked as **2400**	ERJ-1GEF2400C	Panasonic	Digi-Key	P240ABCT-ND	10	0.11	1.1	7
R30, R35-R36	75	3	3		Y	Resistor, **510Ω**, **±1%**, SMD 0201, marked as **5100**	ERJ-1GEF5100C	Panasonic	Digi-Key	P510ABCT-ND	3	0	0	0
R17, R43-R44, R50-R51, R88-R89	76	7	7		Y	Resistor, **1KΩ**, **±1%**, SMD 0201, marked as **1001**	ERJ-1GEF1001C	Panasonic	Digi-Key	P1.00KABCT-ND	10	0.11	1.1	3
R63	77	1	1		Y	Resistor, **1.27KΩ**, **±1%**, SMD 0201, marked as **1271**	ERJ-1GEF1271C	Panasonic	Digi-Key	P1.27KABCT-ND	10	0.11	1.1	9
R34, R62, R90	78	3	3		Y	Resistor, **2.37KΩ**, **±1%**, SMD 0201, marked as **2371**	ERJ-1GEF2371C	Panasonic	Digi-Key	P2.37KABCT-ND	3	0	0	0
R1-R5, R11-R12, R14, R21, R28, R37-R38, R41, R48, R52-R58, R66, R77-R78, R82-R83	79	26	26		Y	Resistor, **4.7KΩ**, **±1%**, SMD 0201, marked as **4701**	ERJ-1GEF4701C	Panasonic	Digi-Key	P4.70KABCT-ND	26	0.11	2.86	0
R81	80	1	1		Y	Resistor, **4.87KΩ**, **±1%**, SMD 0201, marked as **4871**	ERJ-1GEF4871C	Panasonic	Digi-Key	P4.87KABCT-ND	1	0.11	0.11	0
R7-R8, R22-R24, R32-R33	81	7	7		Y	Resistor, **10KΩ**, **±1%**, SMD 0201, marked as **1002**	ERJ-1GEF1002C	Panasonic	Digi-Key	P10.0KABCT-ND	10	0.11	1.1	3
R65	82	1	1		Y	Resistor, **14.7KΩ**, **±1%**, SMD 0201, marked as **1472**	ERJ-1GEF1472C	Panasonic	Digi-Key	P14.7KABCT-ND	1	0.11	0.11	0
R18, R20, R25-R27, R29, R31, R61, R64	83	9	9		Y	Resistor, **20KΩ**, **±1%**, SMD 0201, marked as **2002**	ERJ-1GEF2002C	Panasonic	Digi-Key	P20.0KABCT-ND	10	0.11	1.1	1
R59-R60, R79-R80	84	4	4		Y	Resistor, **49.9KΩ**, **±1%**, SMD 0201, marked as **4992**	ERJ-1GEF4992C	Panasonic	Digi-Key	P49.9KABCT-ND	4	0.11	0.44	0
R75	85	1	1		Y	Resistor, **100KΩ**, **±1%**, SMD 0201, marked as **1003**	ERJ-1GEF1003C	Panasonic	Digi-Key	P100KABCT-ND	10	0.11	1.1	9

DESIGNATOR NUMBER	ITEM #	QTY REQ	EXT QTY	STK CHK	ROHS	DESCRIPTION	PART #	MANUFACTURER	VENDOR	VENDOR PART #	PURCH QTY	UNIT PRICE	TOTAL	NEW STOCK
R10, R72-R74, R76	86	5	5		Y	Resistor, **287KΩ**, **±1%**, SMD 0201, marked as **2873**	ERJ-1GEF2873C	Panasonic	Digi-Key	P287KABCT-ND	10	0.11	1.1	5
R67, R71	87	2	2		Y	Resistor, **357KΩ**, **±1%**, SMD 0201, marked as **3573**	ERJ-1GEF3573C	Panasonic	Digi-Key	P357KABCT-ND	2	0.11	0.22	0
R68-R69	88	2	2		Y	Resistor, **487KΩ**, **±1%**, SMD 0201, marked as **4873**	ERJ-1GEF4873C	Panasonic	Digi-Key	P487KABCT-ND	2	0.11	0.22	0
R70	89	1	1		Y	Resistor, **649KΩ**, **±1%**, SMD 0201, marked as **6493**	ERJ-1GEF6493C	Panasonic	Digi-Key	P649KABCT-ND	1	0.11	0.11	0
R87	90	1	1		Y	Jumper, **0Ω**, SMD 0402, marked as **0**	ERJ-2GE0R00X	Panasonic	Digi-Key	P0.0JCT-ND	1	0.05	0.05	0
---	---	---	---	---	---	**Capacitors**	---	---	---	---	---	---	---	---
C22, C26, C28	91	3	3		Y	Low ESR (0.012 Ohm), Tantalum Chip Capacitor 6.0mm x 3.2mm x 1.9mm, **330µF**, **2.5V**, CP-2312	T520L337M2R5ATE012	Kemet	Digi-Key	399-10345-1-ND	3	3.14	9.42	0
C214	92	1	1		Y	Electric Double Layer Capacitors, **1F**, **2.5V**, D8L22	EECA0EL105	Panasonic	Digi-Key	P6963-ND	1	4.15	4.15	0
C61, C218-C221, C239-C240, C248-C249	93	9	9		Y	Capacitor, Ceramic Chip, X7S,20%, **10µF**, **4V**, C-0603	C1608X7S0G106M080AB	TDK	Digi-Key	445-9100-1-ND	9	0.49	4.41	0
C27, C29-C30, C35, C42, C64, C72, C109-C110, C113, C163, C165, C175, C177, C216-C217, C241-C242	94	18	18		Y	Capacitor, Ceramic Chip, X6S,20%, t=1.6mm, **100µF**, **4V**, C-1206	C3216X6S0G107M160AC	TDK	Digi-Key	445-6012-1-ND	18	1.025	18.45	0
C33-C34, C36, C75-C76, C81-C83, C91-C92, C103, C123, C125, C127-C130, C145, C147-C150, C193, C195-C198	95	27	27		Y	Capacitor, Ceramic Chip, **0.01µF**, **6.3V**, C-0201	ECJ-ZEB0J103K	Panasonic	Digi-Key	399-1278-1-ND	27	0.1	2.7	0

DESIGNATOR NUMBER	ITEM #	QTY REQ	EXT QTY	STK CHK	ROHS	DESCRIPTION	PART #	MANUFACTURER	VENDOR	VENDOR PART #	PURCH QTY	UNIT PRICE	TOTAL	NEW STOCK
---	---	---	---	---	---	---	---	---	---	---	---	---	---	---
C5-C10, C12-C19, C37-C39, C45-C48, C63, C67, C71, C77-C78, C84, C86-C90, C94, C98-C99, C101-C102, C104-C108, C124, C126, C135-C138, C143-C144, C146, C155-C158, C188, C194, C203-C206, C211-C213, C215, C245-C246, C250-C256	96	74	74		Y	Capacitor, Ceramic Chip, **0.1µF**, **6.3V**, C-0201D	ECJ-ZEB0J104M	Panasonic	Digi-Key	PCC2336CT-ND	100	0.0466	4.66	26
C32, C41, C44, C50, C52, C54, C56, C58, C60, C62, C66, C68, C70, C74, C80, C111-C112, C115-C116, C118-C119, C121-C122, C164, C166, C168, C170, C172, C174, C176, C178, C180, C184, C187, C189, C191-C192	97	37	37		Y	Capacitor, Ceramic Chip, X7S,20%, **0.22µF**, **6.3V**, C-0201	C0603X7S0J224M030BC	TDK	Digi-Key	445-9075-1-ND	37	0.173	6.401	0
C85, C93	98	2	2		Y	Capacitor, Ceramic Chip, 10%, **1µF**, **6.3V**, C-0402	ECJ-0EB0J105K	Panasonic	Digi-Key	PCC2393CT-ND	10	0.144	1.44	8
C3-C4, C11	99	3	3		Y	Capacitor, Ceramic Chip, 20%, **4.7µF**, **6.3V**, C-0402	ECJ-0EB0J475M	Panasonic	Digi-Key	PCC2475CT-ND	10	0.29	2.9	7
C97, C100	100	2	2		Y	Capacitor, Ceramic Chip, X5R,20%, **10µF**, **6.3V**, C-0603	ECJ-1VB0J106M	Panasonic	Digi-Key	PCC2395CT-ND	2	0.45	0.9	0
C257-C261	101	5	5		Y	Capacitor, Ceramic Chip, **0.1µF**, **10V**, C-0402D	C0402C104K8PACTU	Kemet	Digi-Key	399-3027-1-ND	10	0.083	0.83	5

DESIGNATOR NUMBER	ITEM #	QTY REQ	EXT QTY	STK CHK	ROHS	DESCRIPTION	PART #	MANUFACTURER	VENDOR	VENDOR PART #	PURCH QTY	UNIT PRICE	TOTAL	NEW STOCK
C1-C2, C31, C40, C43, C49, C51, C53, C55, C57, C59, C65, C69, C73, C79, C114, C117, C120, C167, C169, C171, C173, C179, C181-C183, C185-C186, C190, C226-C227, C234, C243-C244, C247	102	35	35		Y	Capacitor, Ceramic Chip, X7S,20%, **2.2µF**, **10V**, C-0402	C1005X7S1A225K050BC	TDK	Digi-Key	445-9097-1-ND	35	0.28	9.8	0
C230-C233, C235-C238	103	8	8		Y	Capacitor, Ceramic Chip, X7S,20%, **22µF**, **10V**, C-0805	C2012X7S1A226M125AC	TDK	Digi-Key	445-14560-1-ND	8	1.01	8.08	0
C222-C225	104	4	4		Y	Capacitor, Ceramic Chip, **10pF**, **16V**, C-0201	C0201C100D3GACTU	Kemet	Digi-Key	399-8924-1-ND	10	0.021	0.21	6
C228-C229	105	2	2		Y	Capacitor, Ceramic Chip, **1nF**, **25V**, C-0201	ECJ-ZEB1E102K	Panasonic	Digi-Key	PCC2130CT-ND	10	0.075	0.75	8
C95-C96	106	2	2		Y	Capacitor, Ceramic Chip, **330pF**, **50V**, C-0201	ECJ-ZEB1H331K	Panasonic	Digi-Key	PCC2390CT-ND	10	0.075	0.75	8
---	---	---	---	---	---	**Inductors and LC filters**	---	---	---	---	---	---	---	---
L13-L16	107	4	4		Y	SMD Shielded Inductor, 21mOhm, 4mm x 4mm x 2.1mm, **2.2µHn**, **3.1A**,	XFL4020-222ME	Coilcraft	Coilcraft		4	2.13	8.52	0
L9	108	1	1		Y	SMD Inductor, 3mm x 3mm x 1.2mm, **4.7µHn**, **1A**, VLS3012	VLS3012T-4R7M1R0	TDK	Digi-Key	445-3686-1-ND	1	0	0	0
L1-L5, L8, L10-L12, L17-L18	109	11	11		Y	SMD Inductor, 600 Ohm, **600Unknown inductance units - "OHM"**, **300mA**, SMD 0402	BLM15HD601SN1D	Murata	Digi-Key	490-4002-1-ND	11	0	0	0
L6-L7	110	2	2		Y	SMD Inductor, 120 Ohm, **1.2A**, SMD 0402	MPZ1005S121C	TDK	Digi-Key	445-2981-1-ND	2	0	0	0
---	---	---	---	---	---	**Connectors**	---	---	---	---	---	---	---	---
J1-J2	111	2	2		Y	Connector Receptacle Low profile Milli-Grid 2mm, 2 rows, 6contacts total, **500V**, **2A**, SMD 873400624	0873400624	Molex	Digi-Key	WM18689-ND	2	0.92	1.84	0
J6-J9	112	4	4		Y	0.5 mm-Pitch Vertical Slide-Lock FPC Connector, 30 pos., FH1230S05SV	FH12-30S-0.5SV-55	Hirose	Digi-Key	HFL130CT-ND	4	3.11	12.44	0
J10	113	1	1		Y	Connector Header 40 pins, 0.5mm pitch, DF1240DS05V	DF12-40DS-0.5V	Hirose	Digi-Key	H5217CT-ND	1	1.63	1.63	0
J5	114	1	1		Y	Connector micro-SD, Push In/Pull Out, SMD 1040310811	1040310811	Molex	Digi-Key	WM6357CT-ND	1	1.92	1.92	0

DESIGNATOR NUMBER	ITEM #	QTY REQ	EXT QTY	STK CHK	ROHS	DESCRIPTION	PART #	MANUFACTURER	VENDOR	VENDOR PART #	PURCH QTY	UNIT PRICE	TOTAL	NEW STOCK
J4	115	1	1		Y	Connector Micro-USB type AB, 5 contacts, no through-holes, **1A**, 1981584-1	1981584-1	Tyco Electronics	Digi-Key	A97799CT-ND	1	1.58	1.58	0
J3	116	1	1		Y	Gigabit Ethernet PoE connector with Integrated Magnetics, 0826-1X1T-M1-F	0826-1X1T-M1-F	Bel Fuse	Digi-Key	380-1122-ND	1	10.27	10.27	0

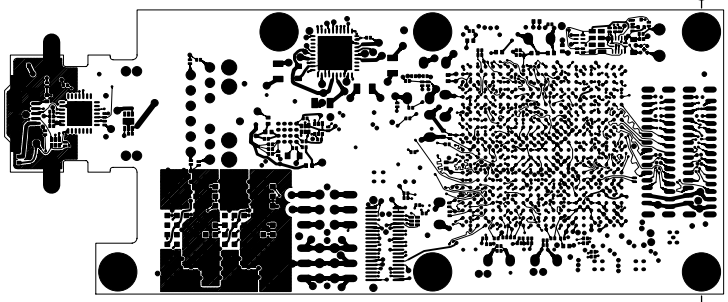

TOP SIDE (LAYER-1)			
	COMPONENT COPPER TOP (L-18)		

Copyright (c) 2013 Elphel, Inc.

Licensed under CERN OHL v 1.1 or later, see http://ohwr.org/cernohl

Permission is also granted to copy, distribute and/or modify this document
under the terms of the GNU Free Documentation License, Version 1.3
or any later version published by the Free Software Foundation;
with no Invariant Sections, no Front-Cover Texts, and no Back-Cover Texts.
A copy of the license is included in the section entitled "GNU
Free Documentation License".

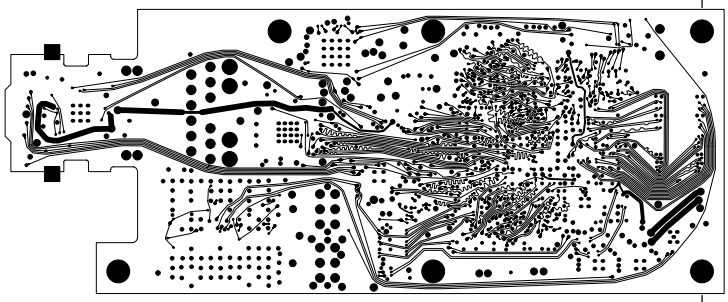

	UNDERTOP (LAYER-2)		

Copyright (c) 2013 Elphel, Inc.

Licensed under CERN OHL v 1.1 or later, see http://ohwr.org/cernohl

Permission is also granted to copy, distribute and/or modify this document
under the terms of the GNU Free Documentation License, Version 1.3
or any later version published by the Free Software Foundation;
with no Invariant Sections, no Front-Cover Texts, and no Back-Cover Texts.
A copy of the license is included in the section entitled "GNU
Free Documentation License".

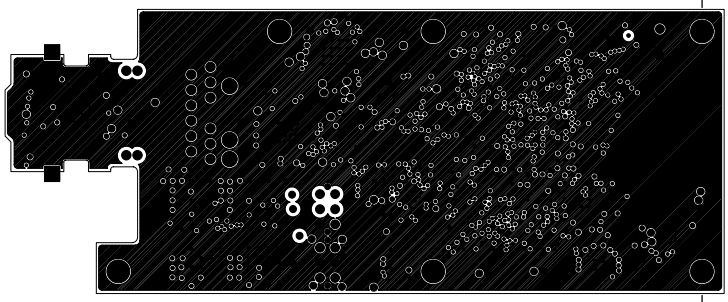

		GND (LAYER-3)	

Copyright (c) 2013 Elphel, Inc.

Licensed under CERN OHL v 1.1 or later, see http://ohwr.org/cernohl

Permission is also granted to copy, distribute and/or modify this document
under the terms of the GNU Free Documentation License, Version 1.3
or any later version published by the Free Software Foundation;
with no Invariant Sections, no Front-Cover Texts, and no Back-Cover Texts.
A copy of the license is included in the section entitled "GNU
Free Documentation License".

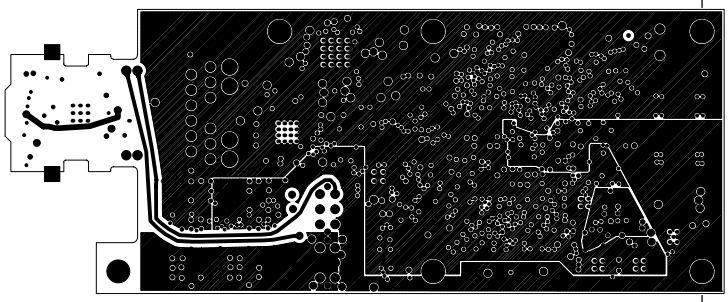

			PWR (LAYER-4)

Copyright (c) 2013 Elphel, Inc.

Licensed under CERN OHL v 1.1 or later, see http://ohwr.org/cernohl

Permission is also granted to copy, distribute and/or modify this document
under the terms of the GNU Free Documentation License, Version 1.3
or any later version published by the Free Software Foundation;
with no Invariant Sections, no Front-Cover Texts, and no Back-Cover Texts.
A copy of the license is included in the section entitled "GNU
Free Documentation License".

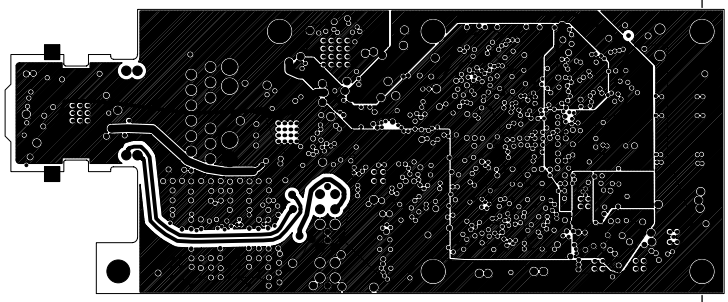

PWR1 (LAYER-4)			

Copyright (c) 2013 Elphel, Inc.

Licensed under CERN OHL v 1.1 or later, see http://ohwr.org/cernohl

Permission is also granted to copy, distribute and/or modify this document
under the terms of the GNU Free Documentation License, Version 1.3
or any later version published by the Free Software Foundation;
with no Invariant Sections, no Front-Cover Texts, and no Back-Cover Texts.
A copy of the license is included in the section entitled "GNU
Free Documentation License".

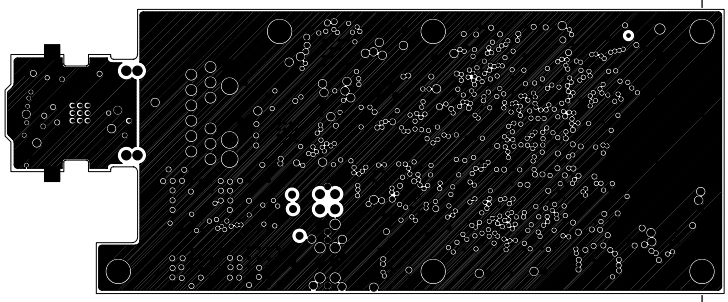

	GND PLANE1 (LAYER-5)		

Copyright (c) 2013 Elphel, Inc.

Licensed under CERN OHL v 1.1 or later, see http://ohwr.org/cernohl

Permission is also granted to copy, distribute and/or modify this document
under the terms of the GNU Free Documentation License, Version 1.3
or any later version published by the Free Software Foundation;
with no Invariant Sections, no Front-Cover Texts, and no Back-Cover Texts.
A copy of the license is included in the section entitled "GNU
Free Documentation License".

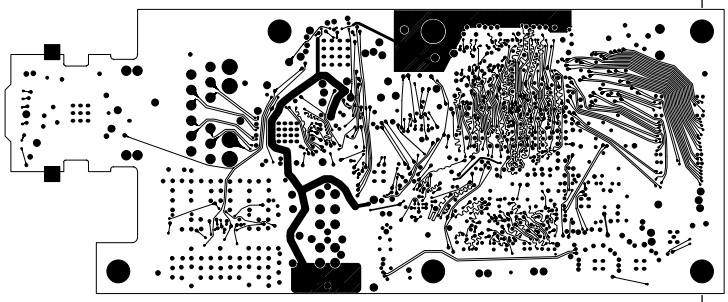

OVERBOTTOM (LAYER-7)

Copyright (c) 2013 Elphel, Inc.

Licensed under CERN OHL v 1.1 or later, see http://ohwr.org/cernohl

Permission is also granted to copy, distribute and/or modify this document
under the terms of the GNU Free Documentation License, Version 1.3
or any later version published by the Free Software Foundation;
with no Invariant Sections, no Front-Cover Texts, and no Back-Cover Texts.
A copy of the license is included in the section entitled "GNU
Free Documentation License".

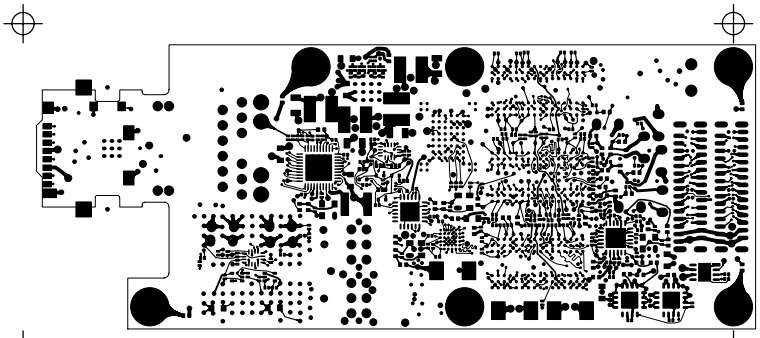

			BOTTOM SIDE (LAYER-8)
		COMPONENT COPPER BOTTOM (L-19)	

Copyright (c) 2013 Elphel, Inc.

Licensed under CERN OHL v 1.1 or later, see http://ohwr.org/cernohl

Permission is also granted to copy, distribute and/or modify this document
under the terms of the GNU Free Documentation License, Version 1.3
or any later version published by the Free Software Foundation;
with no Invariant Sections, no Front-Cover Texts, and no Back-Cover Texts.
A copy of the license is included in the section entitled "GNU
Free Documentation License".

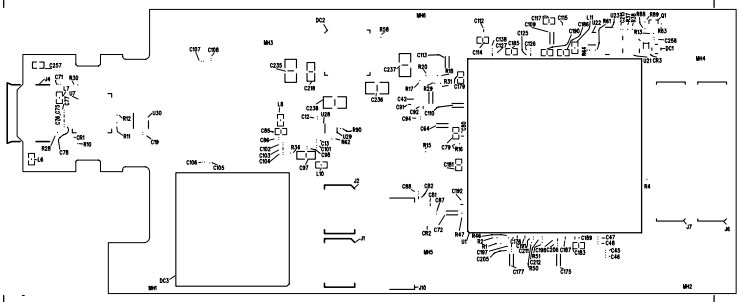

SILKSCREEN TOP			

Copyright (c) 2013 Elphel, Inc.

Licensed under CERN OHL v 1.1 or later, see http://ohwr.org/cernohl

Permission is also granted to copy, distribute and/or modify this document
under the terms of the GNU Free Documentation License, Version 1.3
or any later version published by the Free Software Foundation;
with no Invariant Sections, no Front-Cover Texts, and no Back-Cover Texts.
A copy of the license is included in the section entitled "GNU
Free Documentation License".

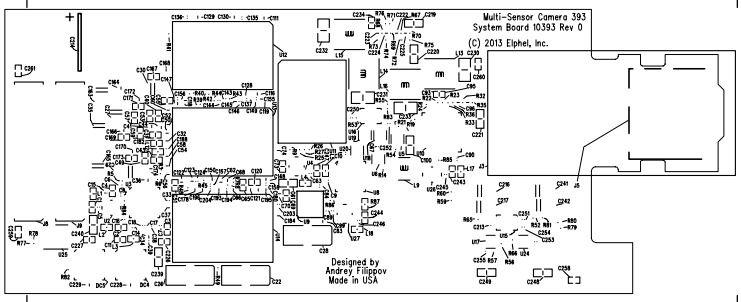

SILKSCREEN BOTTOM			

Copyright (c) 2013 Elphel, Inc.

Licensed under GFDL v 1.1 or later, see http://www.gnu.org/licenses/

Permission is also granted to copy, distribute and/or modify this document
under the terms of the GNU Free Documentation License, Version 1.3
or any later version published by the Free Software Foundation;
with no Invariant Sections, no Front-Cover Texts, and no Back-Cover Texts.
A copy of the license is included in the section entitled "GNU
Free Documentation License".

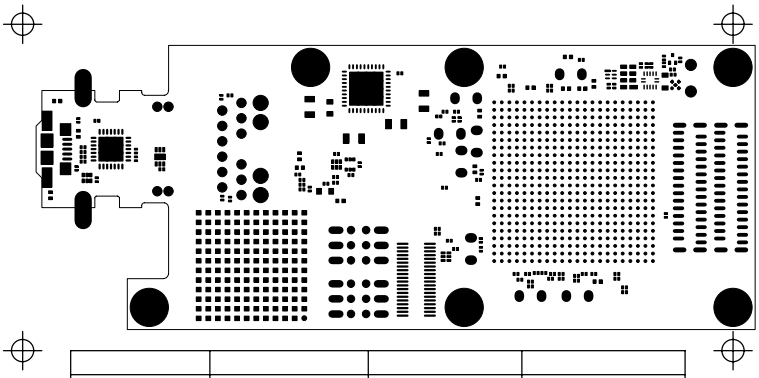

SOLDER MASK TOP

Copyright (c) 2013 Elphel, Inc.

Licensed under CERN OHL v 1.1 or later, see http://ohwr.org/cernohl

Permission is also granted to copy, distribute and/or modify this document
under the terms of the GNU Free Documentation License, Version 1.3
or any later version published by the Free Software Foundation;
with no Invariant Sections, no Front-Cover Texts, and no Back-Cover Texts.
A copy of the license is included in the section entitled "GNU
Free Documentation License".

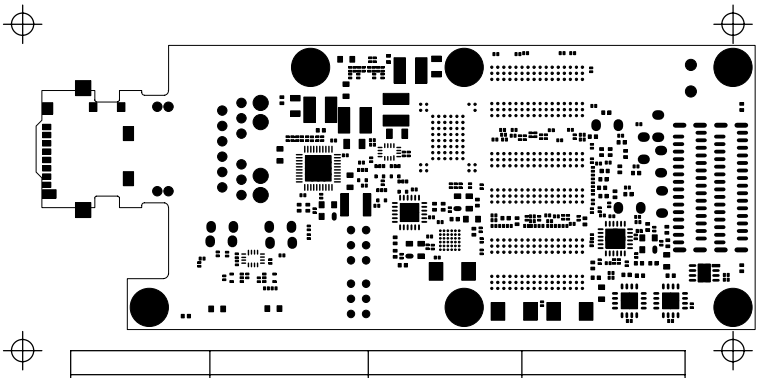

SOLDER MASK BOTTOM

Copyright (c) 2013 Elphel, Inc.

Licensed under CERN OHL v 1.1 or later, see http://ohwr.org/cernohl

Permission is also granted to copy, distribute and/or modify this document
under the terms of the GNU Free Documentation License, Version 1.3
or any later version published by the Free Software Foundation;
with no Invariant Sections, no Front-Cover Texts, and no Back-Cover Texts.
A copy of the license is included in the section entitled "GNU
Free Documentation License".

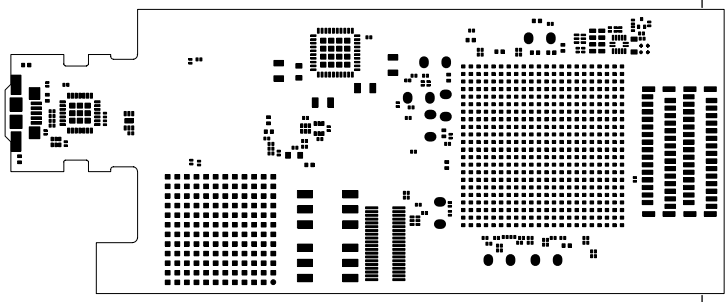

PASTE TOP			

Copyright (c) 2013 Elphel, Inc.

Licensed under CERN OHL v 1.1 or later, see http://ohwr.org/cernohl

Permission is also granted to copy, distribute and/or modify this document
under the terms of the GNU Free Documentation License, Version 1.3
or any later version published by the Free Software Foundation;
with no Invariant Sections, no Front-Cover Texts, and no Back-Cover Texts.
A copy of the license is included in the section entitled "GNU
Free Documentation License".

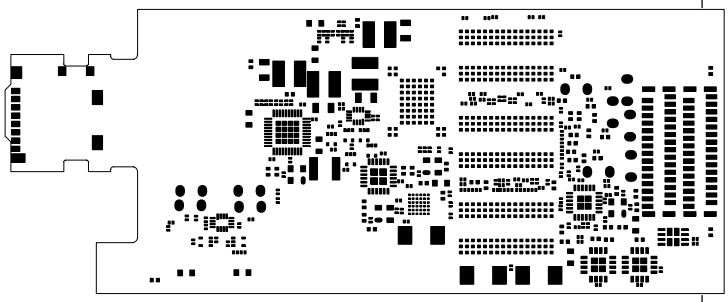

		PASTE BOTTOM	

Copyright (c) 2013 Elphel, Inc.

Licensed under CERN OHL v 1.1 or later, see http://ohwr.org/cernohl

Permission is also granted to copy, distribute and/or modify this document
under the terms of the GNU Free Documentation License, Version 1.3
or any later version published by the Free Software Foundation;
with no Invariant Sections, no Front-Cover Texts, and no Back-Cover Texts.
A copy of the license is included in the section entitled "GNU
Free Documentation License".

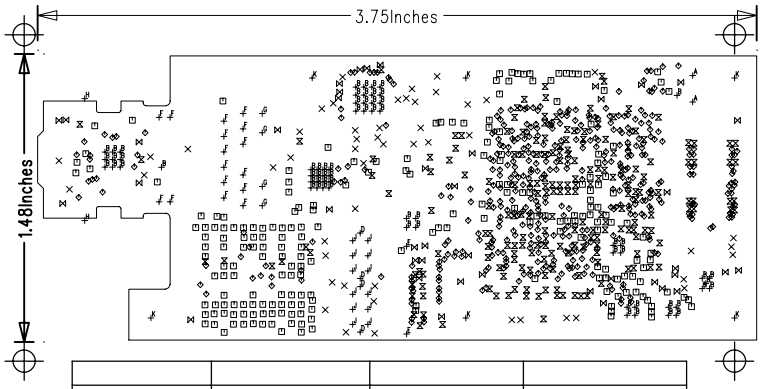

DRILL DRAWING			

Copyright (c) 2013 Elphel, Inc.

Licensed under CERN OHL v 1.1 or later, see http://ohwr.org/cernohl

Permission is also granted to copy, distribute and/or modify this document under the terms of the GNU Free Documentation License, Version 1.3 or any later version published by the Free Software Foundation; with no Invariant Sections, no Front-Cover Texts, and no Back-Cover Texts. A copy of the license is included in the section entitled "GNU Free Documentation License".

SIZE	QTY	SYM	PLTD
22	51		PLTD
10	217		PLTD
4	420		PLTD
8	196		PLTD
15	42		PLTD
31.5	2	A	PLTD
9.84	64	B	PLTD
31.5	4	D	NPLTD
23.62	2	E	PLTD
35	16	F	PLTD
45	4	G	PLTD
62	2	H	PLTD
35.43	12	J	PLTD
87	6	K	PLTD